for a greener tomorrow

MITSUBISHI ELECTRIC
Changes for the Better

FACTORY AUTOMATION

Low Voltage Air Circuit Breakers
<Catalog>

World Super AE

630AF~6300AF

World Super WS Series

Empowering Industries

20 A

Mitsubishi Presents the WS Series, Satisfied with the High Demands of the 21st Century Global Market.

World Super

WS Series

Best-Solution

Various line-up and high flexibility

High-Performance

One-rank higher breaking performance

High-Reliability

Safety and reliability provided

Customer Friendly

Easy handling and retrofitted solution

Global...

World Super AE

Contents

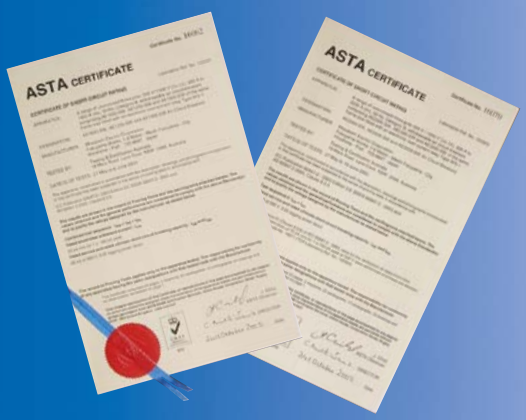

Line up (630 to 6300A)

Rated current (A)	630	1000	1250	1600	2000	2500	3200	4000	5000	6300
SW series	AE630-SW	AE1000-SW	AE1250-SW	AE1600-SW	AE2000-SWA	—				
	—				AE2000-SW	AE2500-SW	AE3200-SW	AE4000-SWA	—	
	—							AE4000-SW	AE5000-SW	AE6300-SW

Warranty

Warranty period and warranty coverage

If any faults or defects (hereinafter “Failure”) found to be the responsibility of Mitsubishi Electric occurs during use of the product within the warranty period, the product shall be repaired at no cost via the sales representative or Mitsubishi Electric Sales office. However, if repairs are required on-site at domestic or overseas locations, expenses to send an engineer will be charged.

1. Warranty period

The warranty period of the product shall be for twelve (12) months after the date of purchase or delivery to the designated place. Note that after manufacture and shipment from Mitsubishi Electric, the maximum distribution period shall be six (6) months, and the longest warranty period after manufacturing shall be eighteen (18) months. The warranty period of the repaired parts shall not exceed the warranty period of the original product before repairs.

2. Warranty coverage

(1) The primary failure diagnosis should be performed by users. However, if required by users, Mitsubishi Electric or Mitsubishi Electric Sales office may be able to perform the diagnosis. In that case, for damages caused by any cause found to be the responsibility of Mitsubishi Electric, the diagnosis will be performed at no cost. For details, contact a distributor.

(2) The coverage shall be limited to ordinary use within the usage state, usage methods, usage environment, and other conditions which follow the instructions and precautions given in the instruction manual, user’s manual, and caution labels on the product.

(3) Even within the warranty period, repair cost shall be charged for the following cases.

[1] Failure occurring from inappropriate storage or handling, carelessness or negligence by the user. Failure caused by selection of hardware or software design on the user side.

[2] Failure caused by modifications, etc. to the product by the user without any approvals from Mitsubishi Electric.

[3] In case Mitsubishi Electric product is assembled into a user’s device, failure that could have been avoided if functions or structures, judged as necessary in the legal safety measures the user’s device is subject to or as necessary by industry standards, had been provided.

[4] Failure that could have been avoided if the maintenance described in the user’s manual has been performed.

[5] Failure caused by external irresistible forces such as fires or abnormal voltages, and failure caused by natural disasters such as earthquakes, lightning, wind and water damages.

[6] Failure caused by reasons unpredictable based on scientific technology standards at the time of shipment from Mitsubishi Electric.

[7] Any other failure found not to be the responsibility of Mitsubishi Electric or that admitted not to be so by the user.

In addition, the warranty applies only to the product delivered. It does not apply to the damage that is caused by the failure of the product.

3. The period to supply the spare parts after discontinuation of production

Mitsubishi Electric shall supply spare parts for five years after discontinuation of production.
After five years, Mitsubishi Electric shall supply spare parts until the spare parts run out of stock.

Exclusion of loss in opportunity and secondary loss from warranty liability

Regardless of the warranty period, Mitsubishi Electric shall not be liable for compensation to:

(1) Damages caused by any cause found not to be the responsibility of Mitsubishi Electric.

(2) Loss in opportunity, lost profits incurred to the user by failures of Mitsubishi Electric product.

(3) Damages whether foreseeable or not, secondary damages, compensation for accidents, and compensation for damages to products other than Mitsubishi Electric products, caused by exceptional situations.

(4) Compensation for cost occurring secondarily from replacement work by the user, maintenance of on-site equipment and start-up test run and other operations.

Product applications

(1) When using the products listed in this catalogue, the following conditions must be confirmed and obeyed. The product must be used so that a failure that occurs to the product does not lead to a serious accident. When a damage or failure occurs, the external backup function or fail-safe function must be executed systematically.

(2) The products listed in this catalogue are designed and manufactured as general-purpose products for application to the general industry field. Therefore, the warranty does not apply to the following special uses.

[1] The use that has a significant influence on the public facilities such as nuclear power plants and other power plants of power companies.
[2] The use for railway companies, government offices, etc. that require to build the special quality assurance system.
[3] The use for aerospace equipment, medical equipment, railway equipment, combustion and fuel equipment, passenger vehicles, manned transportation equipment, recreational equipment, safety equipment, and air conditioner for servers and the cooling facilities that are expected to have a significant influence on life, body, and property.

If the products listed in this catalogue are used for the above mentioned special uses, Mitsubishi Electric does not take any responsibility for the quality, performance, and safety of the product, which includes, but is not limited to, default liability, defect liability, quality assurance liability, tort liability, and product liability. However, in case the special quality (beyond general specifications) is not required and the use is a limited purpose and the backup/fail-safe functions are equipped with the facility, Mitsubishi Electric may determine that the products listed in this catalogue can be guaranteed. For details, consult a distributor or Mitsubishi Electric.

Safety precautions

- Before using this product, read “Safety precautions” and the user’s manual carefully and use it correctly.
- Important safety instructions are given below. Strictly observe the instructions.
- Be sure to instruct the end user with these safety precautions.

Meaning of indications

⚠ DANGER	Incorrect handling of the product will result in a hazardous situation, such as death or serious injury.
⚠ CAUTION	Incorrect handling of the product may result in a hazardous situation according to circumstances.
⃠	This means prohibition. Never ignore this instruction.
⚠	Warning for possible outbreak of a fire under certain conditions.

⚠ DANGER

- Do not use the product under the conditions with over-rated current. Otherwise, ground-fault or short circuit fault could occur due to dielectric breakdown, or explosion could occur due to a short circuit protection failure.
- Do not touch terminal area. There is a risk of electrical shock.

⚠ CAUTION

- The electrical work shall be performed by qualified personnel (electrical expert).
- Inspection and maintenance should be performed by qualified personnel (electrical expert). Before performing wiring works, turn off the upstream circuit breaker. Failure to do so may expose you to electrical shock.
- Tighten the terminal screw with the torque specified in the instruction manual. Failure to do so may cause a fire.
- Do not install or store in an abnormal environment with high temperature, high humidity, dust, corrosive gas, vibrations, or shocks, etc. To do so may cause a fire, malfunction of the circuit breaker or make it inoperative.
- Protect the circuit breaker so that foreign particles, such as dust, concrete powder and iron powder, and rain water will not enter the circuit breaker. Failure to do so may cause malfunction or fire.
- When the circuit breaker trips automatically, remove the cause before turning on the handle. Failure to do so may cause an electric shock or a fire.
- Retighten the terminals periodically. Failure to do so may cause a fire.
- Use the product in 50/60 Hz. Failure to do so may cause malfunction, inoperativeness or fire.
- Dispose of the product as industrial waste.

Changes in product specifications

The specifications of the product listed in this catalogue, manuals or technical documents are subject to change without prior notice.

Product Features

■ Best Solution

Through Flexible and Various Options,To be Built up the Suitable Functions.

Electronic Trip Relay

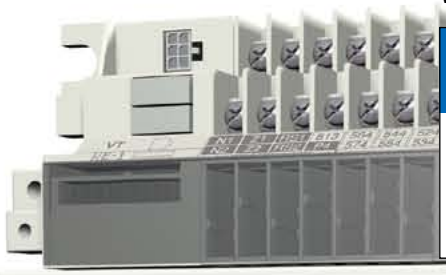

Main setting module ❶

With interchangeable & add-on modules, flexible functions built up.

WS1 WS2 WS3 General use	WM1 WM2 WM3 Generator protection use	WB1 WB2 WB3 Special use	WF1 WF2 WF3 Protective coordination use
			
LTD+STD+INST / MCR	LTD+STD+INST / MCR	INST / MCR	LTD+STD+INST / MCR

Optional setting module ❷

With optional setting modules, GFR, ER etc are added easily.

G1	E1	AP	N5
			
Ground fault protection (GFR)	Earth leakage (ER)(1)	2nd Additional Pre-alarm	Neutral pole(2) 50% protection

Note (1) : Combination with ZCT
(2) : With "N5" optional module, Neutral pole protection will be changed from 100% (standard) to 50%.

Power supply ❸

It is neccessary for Display and LEDs. (see page 21, 22.)

P1	100-240V AC•DC
P2	24-60V DC
P3	100-240V AC / 100-125V DC with output contact
P4	24-60V DC with output contact
P5	100-240V DC with output contact (SSR)(1)

Note (1) : Solid State Relay

Additional function

EX1 Extension module	DP1 Display	TAL Temperature alarm
		The TAL is operated by an unusual temperature of the breaker contacts. (see page 36)
Module for display and communication	Current,Voltage,Power, Harmonics,Trip current,etc. Note : The VT unit is required to display the measured data except the load current.	**MCR-SW MCR switch**: Making current release is possible with MCR switch. (see page 36)

■ **Protection with power from Internal CT**
The Over current protection and Ground fault protection can work with power from Internal CT, even if the control power source is off. For the Trip indicator LED and the additional functions like EX1, DP1/DP2, TAL and Network, the control power source is required.

■ **Secure protection by actual effective value detection**
For spread of electronic devices such as inverter, the actual effective value detection method is adopted, which is strong against deformed waveform and is detected from each phase independently .

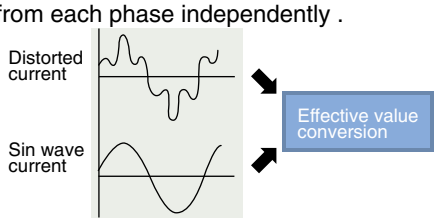

WS relay with ampere meter and fault memory (DP3)

DP3 Display

Displays Current, Harmonic, Trip current, Trip cause,etc. Note : Refer to page 25 on details.

Network

By using various application software for PLC, users can also connect to the network SCADA system(CC-Link, MODBUS).

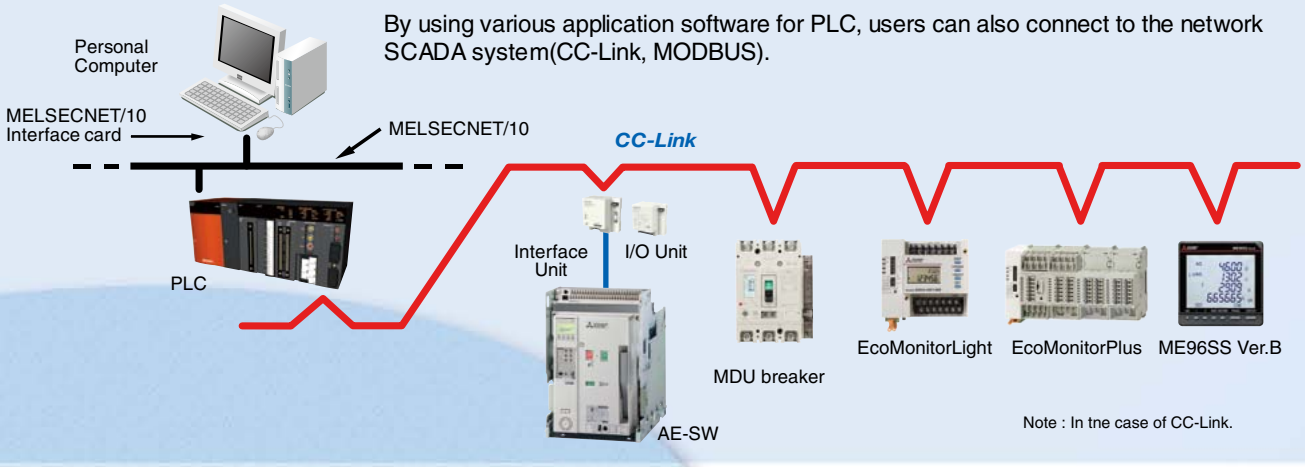

Note : In tne case of CC-Link.

Interface unit

CC-Link | **PROFIBUS-DP** | **MODBUS(RS-485)**

BIF-CC

BIF-PR

BIF-MD

Communication items

Measurement / Alarm	Current, Voltage*, Power*, Harmonics*, etc.
	Tripping cause, Tripping current
	Alarm (PAL, TAL, Self diagnosis, etc.)
Breaker remote control	ON and OFF by CC and SHT
	Spring charge by MD
Breaker status	ON or OFF or Charge state
	Drawout position
	ETR Setting value

Note*: The VT unit is required to display the measured data except for the load current.

I/O unit BIF-CON

ON, OFF, Spring charge, Digital input

Option to interface unit
I/O unit enables to turn ON/OFF the breaker and the spring charge via network.
And by addition of the drawout position switch, it is possible to transmit the breaker drawout position.

Display unit for Panel board DP2

It has the same function as the breaker display unit (DP1).
In the case where the breaker is installed in the panel, it becomes possible to view the measurement information from the outside of the panel board.

Note : The VT unit is required to display the measured data except for the load current.

VT unit VT

VT unit enables to measure voltages, electric powers, harmonics and etc.

Electronic Trip Relay type code

□□□ – □

● Main setting module

WS1, WB1, WM1, WF1	AE630–1600-SW, AE2000–3200-SW, AE4000-SW
WS2, WB2, WM2, WF2	AE2000-SWA, AE4000-SWA, AE5000-SW
WS3,WB3,WM3,WF3	AE6300-SW

WS : General use
WM: Generator protection use
WB : INST only
WF : Protective coordination use

● Optional setting module

G1: Ground fault protection
N5: Neutral pole 50% protection
E1: Earth leakage protection
AP: 2nd Additional Pre-alarm
NA: Without optional setting

● ETR Auxiliary Equipment

☐ Temperature alarm(TAL)
☐ MCR switch(MCR-SW)

● Power supply

P1: 100-240V AC·DC
P2: 24-60V DC
P3: 100-240V AC / 100-125V DC with output contact
P4: 24-60V DC with output contact
P5: 100-240V DC with output contact (SSR : Solid State Relay)

Additional function

- ☐ Extension module(EX1)
  - ☐ Display(DP1)
  - ☐ Display onto panel board(DP2)
  - ☐ VT unit(VT)
  - **Network**
    - ☐ BIF-CC
    - ☐ BIF-PR
    - ☐ BIF-MD

Wire system (when EX1 is specified)	
EX1	☐ 3ϕ3W
	☐ 3ϕ4W
	☐ Normal connection
	☐ Reverse connection

Note : For DP3, refer to page 25 on details.

High-Performance High-Reliability

The safety of valuable circuits can be securely maintained.

Higher short circuit protection performance by improving breaking capacity

In case of 690V AC, Icu = Ics improved
from 50 kA to 65 kA for AE630-SW~AE2000-SWA
from 50 kA to 75 kA for AE2000-SW~AE4000-SWA
from 50 kA to 85 kA for AE4000-SW~AE6300-SW

Icu=Ics (Rated breaking capacity)

50kA (Former model) ➡ 65kA (AE630-SW~AE2000-SWA)
50kA (Former model) ➡ 75kA (AE2000-SW~AE4000-SWA)
50kA (Former model) ➡ 85kA (AE4000-SW~AE6300-SW)

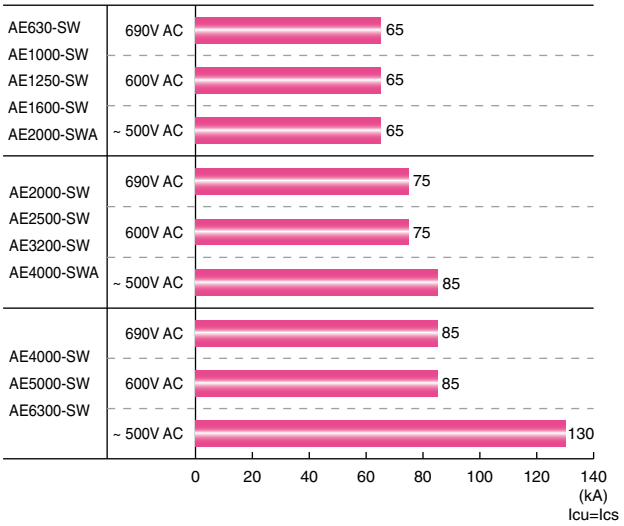

Wide coordination range by improving rated short-time withstand current

Icw (1s) improved
from 65 kA to 75 kA for AE2000-SW~AE4000-SWA
from 85 kA to 100 kA for AE4000-SW~AE6300-SW

Icw (1s) (Rated short-time withstand current)

65kA (Former model) ➡ 75kA (AE2000-SW~AE4000-SWA)
85kA (Former model) ➡ 100kA (AE4000-SW~AE6300-SW)

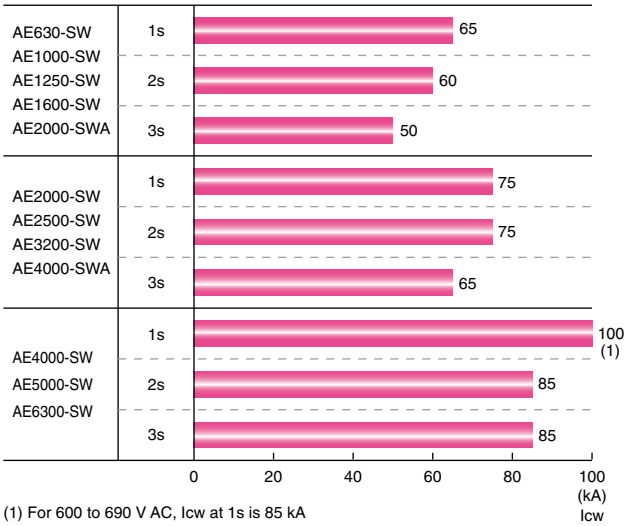

(1) For 600 to 690 V AC, Icw at 1s is 85 kA

Higher safety by improving insulation performance

Rated impulse withstand voltage (Uimp) for the main circuit is improved from 8 kV to 12 kV.

Uimp (Rated impulse withstand voltage)

8kV (Former model) ➡ 12kV (AE-SW series)

Higher reliability by High operating durability

■ Mechanical

AE-SW series are sharply improved in mechanical durability compared to the former model.

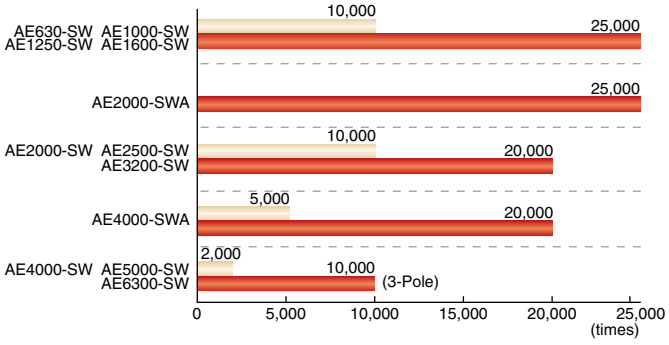

Former model
AE-SW series

■ Customer Friendly

Convenience for Customer

3 sizes

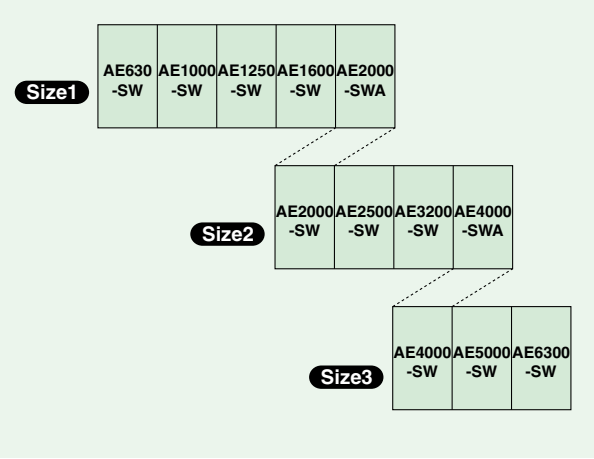

Compact size AE2000-SWA!

■ The compact AE2000-SWA can reduce the panel size.

Replacement from the former model (AE-SS)

AE-SS Manufacturing period 1991 ~ 2007

■ Due to the same installation dimension and outline dimension, the former model (AE-SS) can be replaced with AE-SW series.

■ For the replacement of Drawout type, the Drawout fames (Cradle) for AE-SS have to be replaced with one for AE-SW.

■ AE-SW can be installed to the existing connection bus bar without any special connection kit.
(Except for AE2000-SWA and AE4000-SWA)

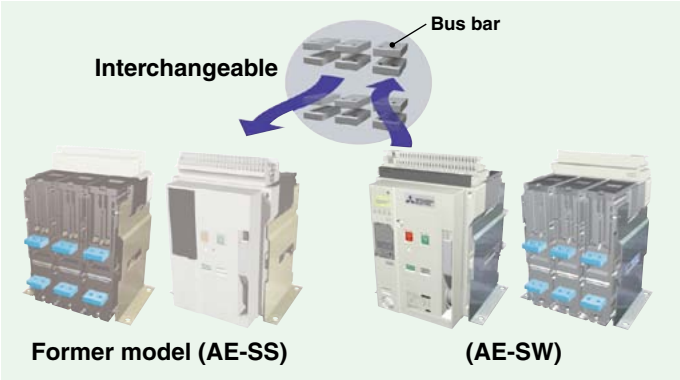

Replacement from the old model (AE-S)

AE-S Manufacturing period 1982 ~ 1991

For the replacement from the old model (AE-S), the special adapter for AE-SW is prepared. (It is available for Drawout type only.) For details, please contact us.

Reverse connection available

Line and Load are not defined on the Main circuit terminals. Therefore, reverse connection is available without any limitation.

Zero arc space

Arc exhaust to the outside of the breaker is drastically reduced for safer operation.
(For AE630-SW~AE4000-SWA models, 600V AC or less)
(Refer to page 60 : Insulation distance)

Appearance and Product structure

Fixed type

AE-SW Series

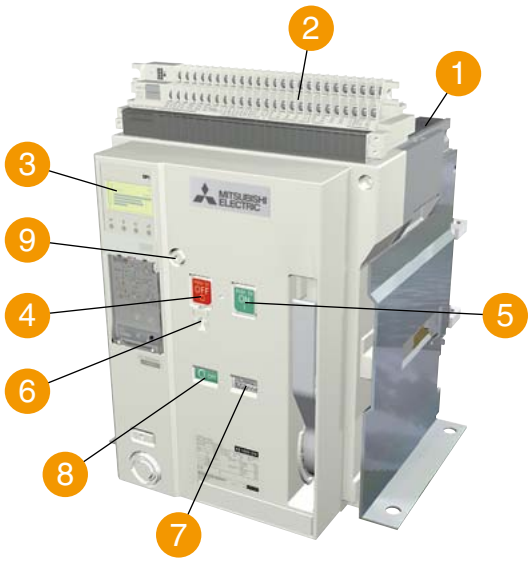

AE1600-SW 3P

1. Arc extinguishing chamber
2. Control circuit terminal block
3. Electronic trip relay
4. OFF button
5. ON button
6. Padlock hook
7. Charging indicator
8. ON/OFF indicator
9. Manual reset button(Optional)

For the fixed type, Lifting hooks (HP) are attached.

Drawout type

AE-SW Series

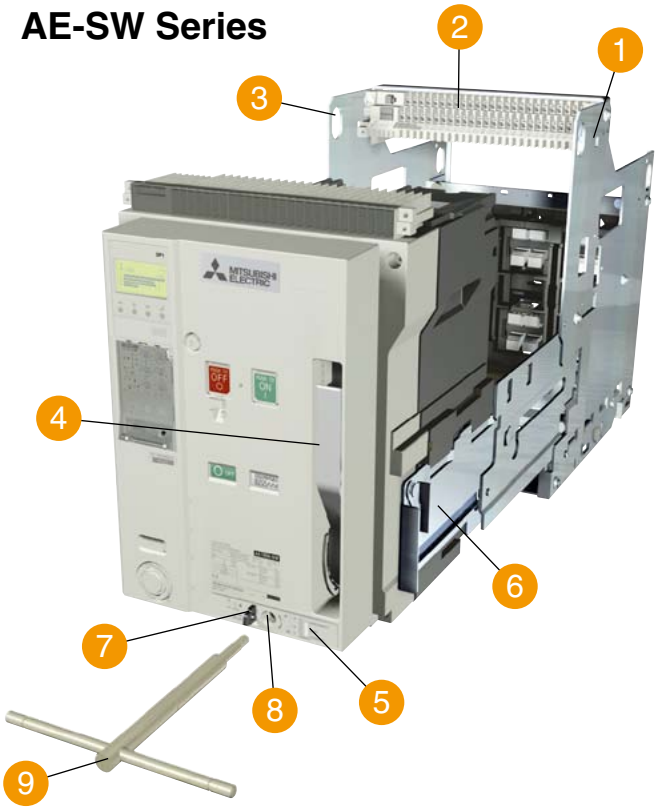

AE1600-SW 3P

1. Cradle
2. Control circuit terminal block
3. Lifting hole
4. Charging handle
5. Drawout position indicator
6. Extension rail
7. Lock plate
8. Aperture for the drawout handle
9. Drawout handle

For the drawout type, Drawout handle is attached.

Skeleton

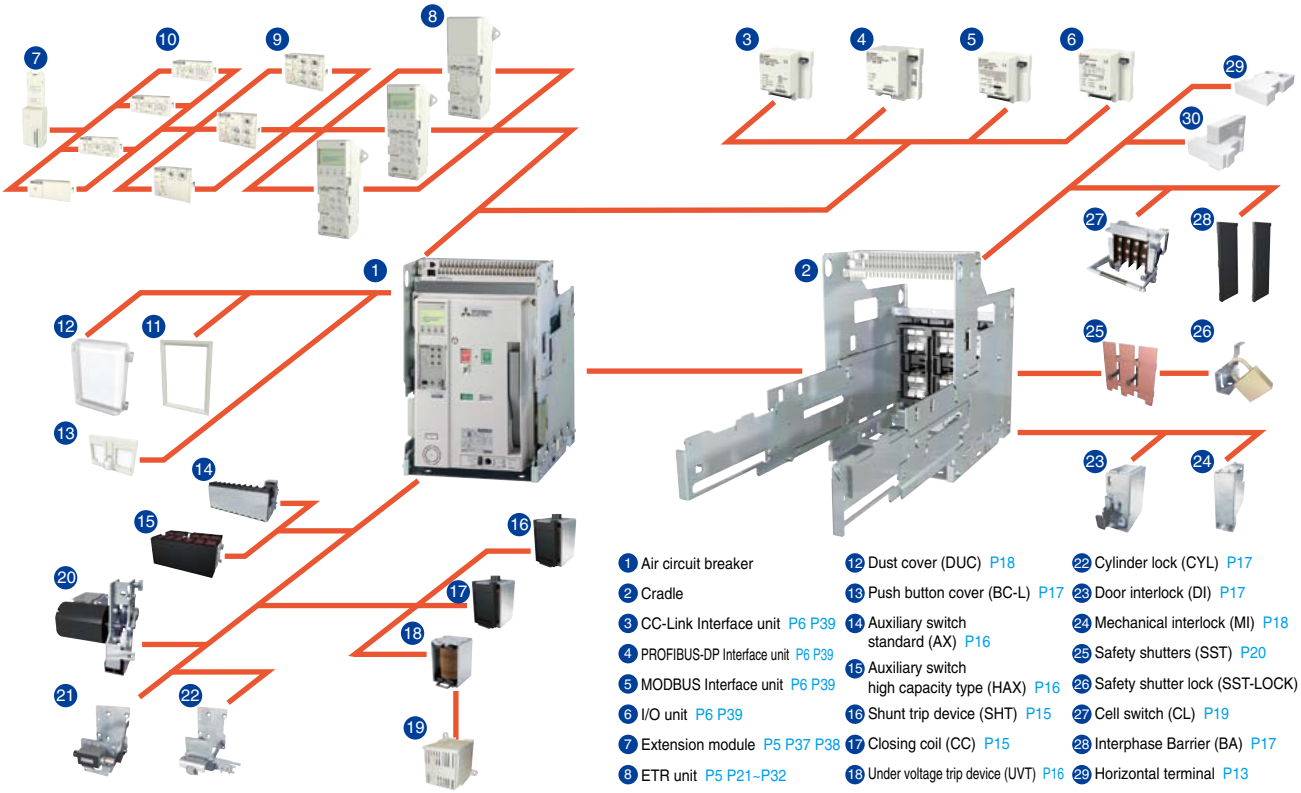

1 Air circuit breaker
2 Cradle
3 CC-Link Interface unit P6 P39
4 PROFIBUS-DP Interface unit P6 P39
5 MODBUS Interface unit P6 P39
6 I/O unit P6 P39
7 Extension module P5 P37 P38
8 ETR unit P5 P21~P32
9 Main setting module P5 P21~P32
10 Optional setting module P5 P33~P36
11 Door frame (DF) P17
12 Dust cover (DUC) P18
13 Push button cover (BC-L) P17
14 Auxiliary switch standard (AX) P16
15 Auxiliary switch high capacity type (HAX) P16
16 Shunt trip device (SHT) P15
17 Closing coil (CC) P15
18 Under voltage trip device (UVT) P16
19 UVT-controller (U-CON) P16
20 Motor charging device (MD) P14
21 Counter (CNT) P17
22 Cylinder lock (CYL) P17
23 Door interlock (DI) P17
24 Mechanical interlock (MI) P18
25 Safety shutters (SST) P20
26 Safety shutter lock (SST-LOCK) P20
27 Cell switch (CL) P19
28 Interphase Barrier (BA) P17
29 Horizontal terminal P13
30 Vertical terminal P13

Product configuration

1 Type

AE630-SW
AE1000-SW
AE1250-SW
AE1600-SW
AE2000-SWA
AE2000-SW
AE2500-SW
AE3200-SW
AE4000-SWA
AE4000-SW
AE5000-SW
AE6300-SW

2 Standard

IEC 60947-2
EN 60947-2(CE)
JIS C 8201-2-1
GB/T 14048.2(CCC)
(Marine Approvals)
LR
BV
DNV GL
ABS
CCS*
NK

*Except for AE4000-SW~AE6300-SW

3 Connection

Drawout type
Horizontal terminal
Vertical terminal
Front terminal

Fixed type

4 Drawout type accessories

Cell switch
Shorting b-contact
Lifting hooks
Safety shutter
Safety shutter lock
Mis-insertion preventor
Test jumper

5 Electrical accessories

Auxiliary switch
Motor charging device
Closing coil
Shunt trip device
Under voltage trip device

6 Mechanical accessories

Push button cover
Counter
Cylinder lock
Terminal cover
Door frame
Dust cover
Interphase barrier
Mechanical interlock
Door interlock

7 Electronic trip relay

General use
WS type

Generator protection use
WM type

Special use
WB type

Protective coordination use
WF type

Optional
G1:Ground fault protection
E1:Earth leakage protection
AP:2nd Additional Pre-alarm
N5:Neutral pole 50% protection

8 Relay accessories

Extension module
Display
Temperature alarm
MCR switch
Neutral CT
External ZCT
VT unit

9 Network

CC-Link Interface unit
PROFIBUS-DP Interface unit
MODBUS Interface unit
I/O unit

Product Specification

● Specification

Type				AE630-SW	AE1000-SW	AE1250-SW	AE1600-SW
Frame size (A)				630	1000	1250	1600
Rated insulation voltage (Ui) (50/60Hz)(AC.V)				1000			
Rated operational voltage (Ue) (50/60Hz)(AC.V)				690			
Rated impulse withstand voltage (Uimp) (kV)				12			
Utilization category				B			
Pollution degree				3			
EMC environment condition (environment A or B) (Note 15)				A			
Number of poles				3, 4			
Rated current In (CT rating) (A)				630 (Note 5)	1000	1250	1600
Current setting Ir (A) (40˚C)	WS WB General use (Current rating adjustable 0.5 to 1.0 × In 0.05 step)			315-346.5-378-409.5-441-472.5-504-535.5-567-598.5-630 (Note 5)	500-550-600-650-700-750-800-850-900-950-1000	625-687.5-750-812.5-875-937.5-1000-1062.5-1125-1187.5-1250	800-880-960-1040-1120-1200-1280-1360-1440-1520-1600
	WM Generator protection use (Current rating fixed) (Note 10)			160 ≤ Ir ≤ 630	400 ≤ Ir ≤ 1000	800 ≤ Ir ≤ 1250	1000 ≤ Ir ≤ 1600
Rated current of neutral pole (A)				630	1000	1250	1600
IEC60947-2 EN60947-2 JIS C 8201-2-1	Ultimate breaking capacity Icu (kA rms)		690V AC	65			
			600V AC	65			
			240-500V AC	65			
		with MCR	690V AC	65			
			600V AC	65			
			240-500V AC	65			
		Bare + External relay	690V AC	25 (Note 1)			
			500V AC	25 (Note 1)			
	Rated service breaking capacity Ics (kA rms) %Icu			100%			
	Rated making capacity Icm (kA peak)		690V AC	143			
			600V AC	143			
			240-500V AC	143			
		with MCR	690V AC	143			
			600V AC	143			
			240-500V AC	143			
		Bare or Bare + External relay	690V AC	52.5			
			500V AC	52.5			
Rated short time withstand current Icw (kA rms)			1s	65			
			2s	60			
			3s	50			
Maximum total breaking time (ms)				40 (Note 6)			
Maximum closing time (ms)				80			
Number of operating cycles (Note 2)	With rated current		500V AC In	5,000			
			690V AC In	5,000			
	Without rated current			25,000 (Note 4)			
Connecting terminal (Note 11)	Horizontal terminal			○			
	Vertical terminal			○			
	Front terminal			○			
Outline dimension (mm) H×W×D	Fixed type		3-pole	410×340×290			
			4-pole	410×425×290			
	Drawout type		3-pole	430×300×375			
			4-pole	430×385×375			
Weight (kg) (without Accessory)	Fixed type		3-pole	35	35		35
			4-pole	42	42	43	43
	Drawout type (including cradle)		3-pole	56	56		56
			4-pole	70	70		70
	Cradle only (Note 13)		3-pole	24			
			4-pole	28			
Marine approval (Note 12)	3-pole			○ (LR, BV, DNV GL, ABS, NK, CCS)			

(Note 1) This is the Icu value when the bare main body and the external relay are combined.
(Note 2) The number of operating cycles without rated current also includes the number of operating cycles with rated current.
(Note 3) AE2000-SWA, AE4000-SWA and AE4000-SW~AE6300-SW apply for only vertical terminal of connecting terminal.
(Note 4) This value is max. operating cycle for just ACB body without any accessories.
(The max. operating cycles for the accessories like AX, MD,CC, SHT and UVT are half of this value.)
(Note 5) Products with low rating types are available. For AE630-SW low rating types (250A, 315A, 500A), DP3 is not available.

AE 630-SW 3 kinds of products with low rating types are available.
- 250-275-300-325-350-375-400-425-450-475-500(CT 500A)
- 157.5-173.3-189-204.8-220.5-236.3-252-267.8-283.5-299.3-315(CT 315A)
- 125-137.5-150-162.5-175-187.5-200-212.5-225-237.5-250(CT 250A)

AE 2000-SW 2 kinds of products with low rating types are available.
- 800-880-960-1040-1120-1200-1280-1360-1440-1520-1600(CT 1600A)
- 625-687.5-750-812.5-875-937.5-1000-1062.5-1125-1187.5-1250(CT 1250A)

	AE2000-SWA	AE2000-SW	AE2500-SW	AE3200-SW	AE4000-SWA	AE4000-SW	AE5000-SW	AE6300-SW
	2000	2000	2500	3200	4000	4000	5000	6300
		1000				1000		
		690				690		
		12				12		
		B				B		
		3				3		
		A				A		
		3, 4				3, 4 (HN, FN) (Note 7)		
	2000	2000 (Note 5)	2500	3200	4000	4000	5000	6300
	1000-1100-1200-1300-1400-1500-1600-1700-1800-1900-2000	1000-1100-1200-1300-1400-1500-1600-1700-1800-1900-2000 (Note 5)	1250-1375-1500-1625-1750-1875-2000-2125-2250-2375-2500	1600-1760-1920-2080-2240-2400-2560-2720-2880-3040-3200	2000-2200-2400-2600-2800-3000-3200-3400-3600-3800-4000	2000-2200-2400-2600-2800-3000-3200-3400-3600-3800-4000	2500-2750-3000-3250-3500-3750-4000-4250-4500-4750-5000	3150-3465-3780-4095-4410-4725-5040-5355-5670-5985-6300
	1250 ≤ Ir ≤ 2000	800 ≤ Ir ≤ 2000	1600 ≤ Ir ≤ 2500	2000 ≤ Ir ≤ 3200	2500 ≤ Ir ≤ 4000	2500 ≤ Ir ≤ 4000	3150 ≤ Ir ≤ 5000	4000 ≤ Ir ≤ 6300
	2000	2000	2500	3200	4000	2000 (4000) (Note 8)	2500 (5000) (Note 8)	3150 (6300) (Note 8)
		75				85		
		75				85		
		85				130 (Note 9)		
		75				85		
		75				85		
		75				100		
		45 (Note 1)				65 (Note 1)		
		45 (Note 1)				65 (Note 1)		
		100%				100%		
		165				187		
		165				187		
		187				286		
		165				187		
		165				187		
		165				220		
		94.5				143		
		94.5				143		
		75				100 (Note 14)		
		75				85		
		65				85		
		40 (Note 6)				50 (Note 6)		
		80				80		
	1,500	1,500		1,000	500	1,000		
	1,500	1,500		1,000	500	1,000		
		20,000 (Note 4)				10,000 (3P) / 5,000 (4P)		
	-	○			-	-		
	○ (Note 3)	○			○ (Note 3)	○ (Note 3)		
	-	○			-	-		
		410×475×290				414×874×290		
		410×605×290				414×1004(1134)×290 (Note 8)		
		430×435×375			430×439×375	480×889×375		
		430×565×375			430×569×375	480×1019(1149)×375 (Note 8)		
	44	51	52	54	73	141	141	148
	54	64	64	67	92	159 (179)	159 (179)	166 (188)
	62	81	81	85	101	194	194	208
	75	101	101	106	127	223 (247)	223 (247)	238 (269)
	27	33		34	46	98	98	107
	32	40		42	58	113 (127)	113 (127)	121 (138)
		○ (LR, BV, DNV GL, ABS, NK, CCS)				○ (NK, LR, DNV GL, BV, ABS)		

(Note 6) This value means the instantaneous breaking time at shortcircuit interruption. As for accessories (SHT, UVT), refer to page 13 and 14.
(Note 7) 4(HN) means the neutral poles current capacity is 50% of the rated current, for 4 poles. 4(FN) means the neutral poles current capacity is 100% of the rated current, for 4 poles.
(Note 8) ( ) shows the value for 4P FN type.
(Note 9) Marine approval value is 138kA.
(Note 10) For WM relay, the current setting Ir can be set by 1A except AE630-SW low rating types "CT315A" and "CT250A". For AE630-SW with "CT315A" and "CT250A", it can be set by 0.1A.
(Note 11) As for selectable connection, please refer to page 13.
(Note 12) AE4000-SW ~ AE6300-SW don't apply to CCS marine approval.
(Note 13) These weights include an electronic relay, but don't include other accessories.
(Note 14) For 600 ~ 690V AC, Icw at 1s is 85kA.
(Note 15) This product is designed on the basis of environment A. When used under environment B, it might cause electromagnetic interference, and the user would be asked to do countermeasures to reduce these interference.

(Remark) All models conform the isolating function according to IEC 60947-2. Reverse connection is possible.

Connections

Over view (AE630~1600-SW, AE2000~3200-SW)

Connections / Type	Horizontal	Vertical (VT)	Front (FT)	Vertical terminal adapter (VTA)	Front terminal adapter (FTA)
Fixed type (FIX)		——	——	 FIX-VTA	 FIX-FTA
Drawout type (DR)		 DR-VT	 DR-FT	 DR-VTA	 DR-FTA

● Connection image : AE630~1600-SW, 3-pole type

Over view (AE2000-SWA, AE4000-SWA, AE4000~6300-SW)

Connections / Type	Vertical (VT) Standard
Fixed type (FIX)	 FIX-VT
Drawout type (DR)	 DR-VT

● Connection image : AE2000-SWA, 3-pole type
● For AE2000-SWA, AE4000-SWA, AE4000-SW, AE5000-SW and AE6300-SW models, vertical terminal only is available.

Available connections

Connections	Breakers	AE630-SW	AE1000-SW	AE1250-SW	AE1600-SW	AE2000-SWA	AE2000-SW	AE2500-SW	AE3200-SW	AE4000-SWA	AE4000-SW	AE5000-SW	AE6300-SW
Fixed type (FIX)	Horizontal	○	○	○	○	–	○	○	○	–	–	–	–
	FIX-VT	–	–	–	–	○	–	–	–	○	○	○	○
	FIX-VTA	○	○	○	○	–	○	○	○	–	–	–	–
	FIX-FTA	○	○	○	○	–	○	○	○	–	–	–	–
Drawout type (DR)	Horizontal	○	○	○	○	–	○	○	○	–	–	–	–
	DR-VT	○	○	○	○	○	○	○	○	○	○	○	○
	DR-FT	○	○	○	○	–	○	○	○	–	–	–	–
	DR-VTA	○	○	○	○	–	○	○	○	–	–	–	–
	DR-FTA	○	○	○	○	–	○	○	○	–	–	–	–

○ Available

Manual charging

The closing spring is charged by the manual charging handle. The breaker is closed when the ON button is pressed, and opened when the OFF button is pressed.

- When the closing spring is completely charged, the charging indicator will show "CHARGED".
- Please close the breaker after the charging indicator turned to "CHARGED".
- The indicator shows the ON or OFF state of the main contacts.
- The breaker cannot be closed while the OFF button is being pressed. (Safety design)
- OFF lock is enabled by padlock (See P9, P19) as standard.

Motor charging device (MD)

Option

1

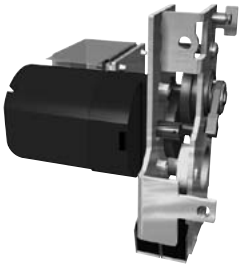

The closing spring is charged by an electric motor. When the breaker is closed, the spring is charged automatically (ON-charge method). The closing coil (CC) is required to remotely close the breaker, and the shunt trip device is required to remotely open the breaker.

- Manual charging operation is also possible.
- Pumping prevention is assured both electrically and mechanically.
- As the charging completion contact is separate from the electrical charging circuit, its function in the control scheme can be arranged as desired.

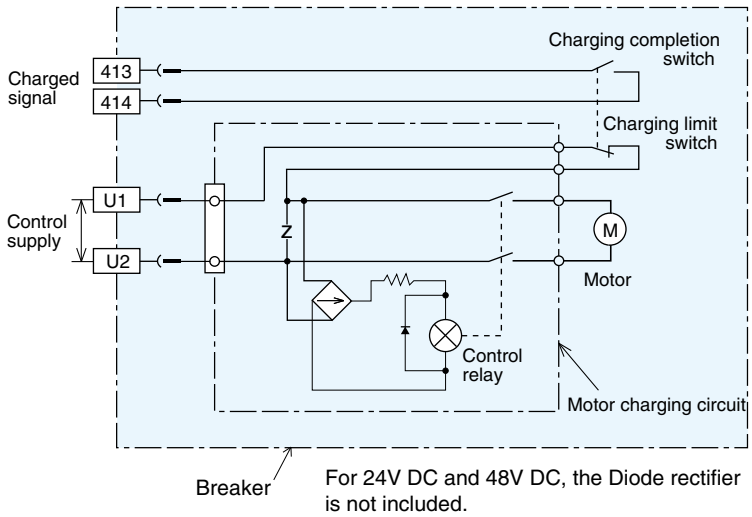

OFF charging method

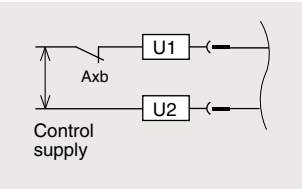

OFF charging method is also available. The closing spring is charged automatically when the breaker is opened. This is available only by externally connecting b contact (AXb) of the auxiliary switch to the motor charging circuit in series.
In case of DC power supply, please use high capacity auxiliary switch (HAX).

Polarity of DC circuit use

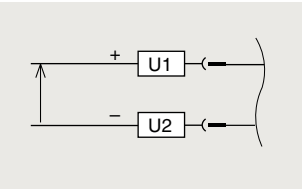

Motor charging rating

Rated voltage (V)	Applicable voltage range (V)	Applied voltage (V)	Inrush Current [Peak value] (A)	Inrush time (s)	Steady current (A)	Charging time (s)	Criterion for power requirement (VA, W)
24DC	18 ~ 26.4	24	22	< 0.4	6	≤5	500
48DC	36 ~ 52.8	48	14	< 0.4	3		
AC/DC 100-125	85 ~ 137.5	100	10(10)	AC: < 0.45	3(4)		700
		125	12(12)	DC: < 0.25	3(4)		1000
AC/DC 200-250	170 ~ 275	200	5(7)	AC: < 0.45	1(2)		700
		250	6(8)	DC: < 0.25	1(2)		1000

Values in parentheses show values for AE4000-SWA 4 pole and AE4000-SW ~ AE6300-SW.
We cannot manufacture AE4000-SWA 4 pole and AE4000-SW ~ AE6300-SW in 24V DC and 48V DC rating.
These values are for reference, not guaranteed values. Common use for 50 and 60Hz in AC.

Charging completion contact rating

Voltage (V)		Current (A) Resistance load	Current (A) Inductive load
AC (50/60Hz)	460	5	2.5
	250	10	10
	125	10	10
DC	250	3	1.5
	125	10	6
	30	10	10

Accessories (for breaker unit)

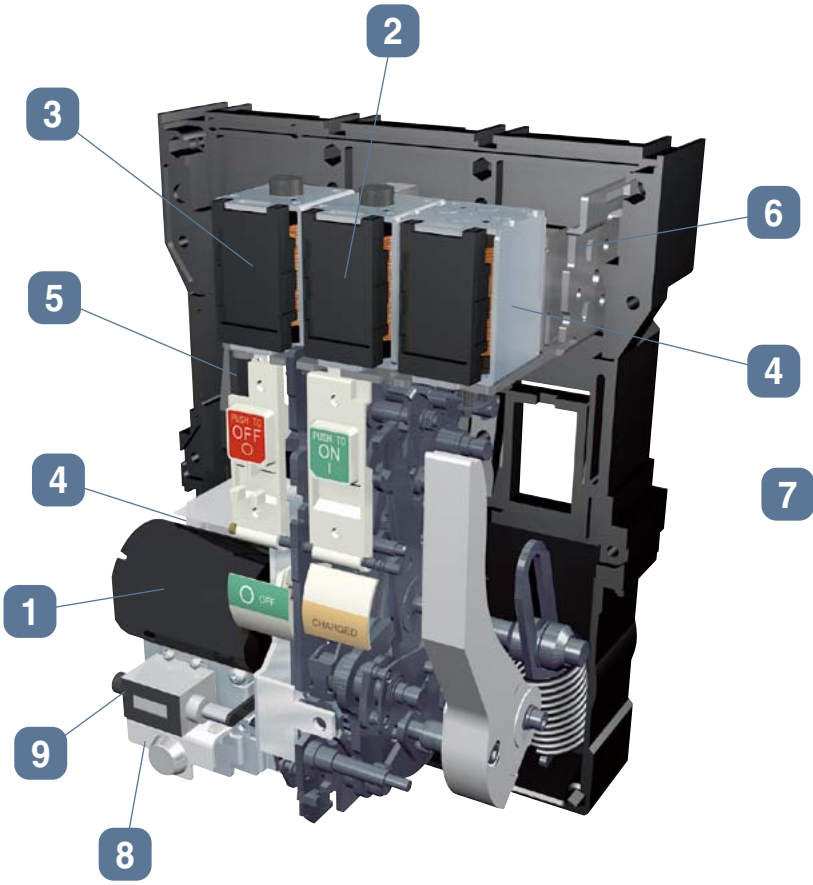

Closing coil (CC)

Option

2

The closing coil is a device to close the breaker by remote control.

- An interlock to prevent pumping is provided electrically.

Rated voltage (Applicable voltage range)	Operating voltage · Operating inrush current (VA)		Closing time (Note1)
	AC	DC	
24-48V DC (18~52.8)	–	24V DC 3.0A (100W)	0.08 s or less
	–	48V DC 6.0A (200W)	
100-250V AC · DC common (75-275)	100V AC 0.7A (100VA)	100V DC 0.8A (100W)	
	250V AC 1.7A (200VA)	250V DC 1.8A (250W)	

Note 1) In case of double rating of rated voltage, it is the value for the lower rating. (Example) In case of 24-48V DC, it is operating time for 24V DC.
Note 2) Do not operate CC within 0.5 seconds after charging the breaker.
Note 3) When the breaker was opened by SHT, please take an interval at least 0.5 seconds before re-closing the breaker.
Note 4) These values are for reference, not guaranteed values.
Note 5) Common use for 50 and 60Hz in AC.

CC circuit diagram

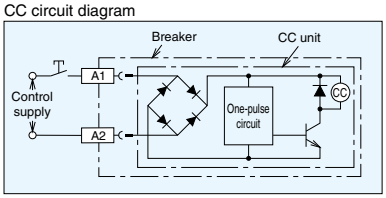

Diode rectifier is not used for control source 24~48V DC.

- Closing time means time from the initial energization of the closing coil up to the complete closing of the main contacts.
- As CC is one-pulse driven, it is not necessary to insert AXb for burning prevention purposes. Inserting AXb will cause anti-pumping function to be ineffective.

Shunt trip device (SHT)

Option

3

The shunt trip device is a device to open the breaker by remote control. A cut-off switch is included.

Rated voltage (Applicable voltage range)	Operating voltage · Operating inrush current (VA)		Operating time (Note1)
	AC	DC	
24-48V DC (16.8~52.8)	–	24V DC 2.5A (100W)	0.04 s or less
	–	48V DC 6.0A (200W)	
100-250V AC · DC common (70-275)	100V AC 0.4A (100VA)	100V DC 0.6A (100W)	
	250V AC 1.4A (150VA)	250V DC 1.6A (200W)	
380~500V AC (266~550)	380V AC 0.5A (250VA) 500V AC 0.7A (300VA)	-	

Note 1) In case of double rating of rated voltage, it is the value for the lower rating. (Example) In case of 24-48V DC, it is operating time for 24V DC.
Note 2) Operating time for AE4000-SW~AE6300-SW is 0.05s or less.
Note 3) These values are for reference, not guaranteed values.
Note 4) Common use for 50 and 60Hz in AC.

SHT circuit diagram

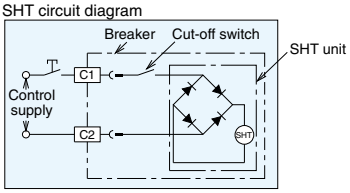

Diode rectifier is not used for control source 24~48V DC.

Under voltage trip device (UVT)

Option

4

This is the device that automatically trips the breaker when the circuit voltage drops below the nominal voltage, and comprises UVT coil and UVT controller. There are 3 kinds of tripping time, INST, 0.5s and 3.0s. A trip terminal for forced OFF function is included as standard equipment.

Rated voltage	Frequency	operating time (time delay)	Pick-up voltage	Drop-out voltage	Trip function	Power consumption
100-120V AC	50/60Hz	☐ Inst(0.2s) ☐ 0.5s(Min.) ☐ 3.0s(Min.)	65~85V	45~70V	With open circuit of DT1,DT2 terminals.	Steady : 20VA Inrush : 200VA ≦ 0.4S (100-120V AC 24V DC Inrush:100VA ≦ 1S)
200-240V AC			130~170V	90~140V		
380-460V AC			247~323V	171~266V		
24V DC	-		15.6~20.4V	10.8~16.8V		
48V DC			31.2~40.8V	21.6~33.6V		
100-110V DC			65~85V	45~70V		
120-125V DC			78~102V	54~84V		

Note1) In case of 380-460V AC, the external unit is attached additionally.
Note2) The operating time is a guarantee value when it drops from 85% or more of rated voltage.
Note3) Time delay should be allowed for 1.5s between applying the voltage to the UVT and closing the breaker.
Note4) If a remote trip function is required, remove the shorting bar (DT1 DT2) and connect a normally closed switch, rated 0.5A at 150V DC across them.
Note5) If a forced OFF function is used, the shorting (signal input to DT1 and DT2) should be held for 0.2 sec. and more.
Note6) When an ambient temperature is at 60˚C, this device is installed outside of the ACB body.
Note7) The operating time in the above table does not include the operating time of the ACB.
Note8) Common use for 50 and 60Hz in AC.

UVT circuit diagram

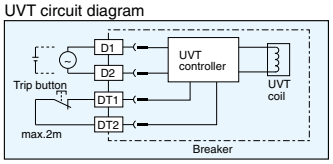

UVT circuit diagram (In case of 380~460V AC)

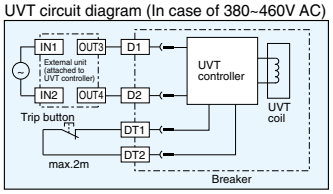

OCR alarm (AL) [Automatic reset type Short-time operation (30ms)]

Standard if ETR is equipped

5

OCR alarm (AL) is provided as standard if ETR is equipped. OCR alarm (AL) is the contact (1a) of short-time operation (30ms), being output when the breaker is tripped by the electronic trip relay. Two types of automatic reset type (standard) and manual reset type (optional) are available. When ordering, specify either automatic reset or Manual reset.

Switch rating

Voltage (V)		Current (A)	
		Resistive load	Inductive load
AC (50/60Hz)	240	3	2
	125	5	3
DC	240	0.2	0.2
	125	0.4	0.4
	30	4	3

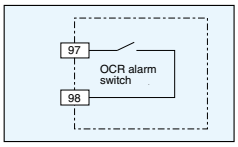

Note1) Though the control power supply is unnecessary to activate OCR alarm (AL), the self-holding circuit is necessary since the contact output is activated for the short time (30ms).
Note2) This works when tripping occurs in LTD, STD, INST, GFR or ER.
Note3) If any continuous output of OCR alarm (AL) is necessary, use the trip indicator (TI) output contact of the electronic trip relay. Choose P3, P4 or P5 for power supply type.

OCR alarm (AL) [MRE : Manual reset type]

Option

On the manual reset type (optional), the gray manual reset button on the front side of the breaker will stick out to continuously output OCR alarm (AL) if the breaker is tripped by the electronic trip relay. After tripping, the breaker can not be turned on unless the manual reset button is pressed for resetting.

Auxiliary switch Standard (AX) • High capacity type (HAX)

Option

6

This is the contact that remotely indicates the ON or OFF status of the breaker.

Switch rating

Voltage (V)		Current (A)			
		Standard (AX)		High capacity type (HAX)	
		Resistive load	Inductive load	Resistive load	Inductive load
AC (50/60Hz)	250	10	10	10	10
	125	10	10	10	10
DC	250	0.3	0.3	3	1.5
	125	0.6	0.6	10	6
	30	10	6	10	10
Maximum contacts		5a5b		5a5b	

Change-over sequence	Breaker state	a-contact (NO)	b-contact (NC)
	ON	ON	OFF
	OFF	OFF	ON

Min. load range graph

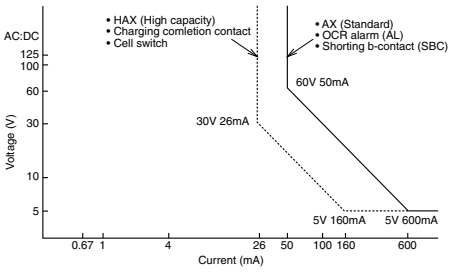

- The a and b conacts may turn simultaneously to ON instantaneously at the time of changing the contact; Pay attention to the contact state when designing circuits.
- The chattering time at the time of contact ON-OFF is below 0.025 s.

Accessories (for breaker unit)

Push button cover (BC-L)

Option

7

The cover prevents careless manual operation (ON,OFF) of the push buttons.
BC-L can be locked by a padlock (The padlock should be supplied by the customer.)
For the suitable size of a padlock, refer to Page 19.

Cylinder lock (CYL)

Option

8

The breaker is locked OFF with the cylinder lock.

- Since it is an interlock which only allows the key to be removed when the breaker is locked off, it can be used for interlocking two or more breakers.

Counter (CNT)

Option

9

The number of open/close operations of the breaker are shown by a 5 digit counter.

Door frame (DF)

Option

The door frame improves the appearance, after cutting out the panel door to install the breaker.
As for panel cut-out dimensions, refer to page 55.

Door interlock (DI)

Option

The panel door cannot be opened unless the breaker is open position.

- A wire type mechanical interlock allows flexibility in positioning breakers in the switchboard.
- The parts of the Door panel should be supplied by the customer.
- DI can not be installed with "Mechanical interlock(MI)for 3 breakers."

Interphase Barrier (BA)

Option

This enhances the interphase insulation between the terminal portions of the breaker, and prevents short-circuit due to conductive inclusion or dust. It can be attached and detached easily. As for its availability, refer to the following table.

Type	Connections	AE630-SW~ AE1600-SW	AE2000-SWA	AE2000-SW~ AE3200-SW	AE4000-SWA	AE4000-SW~ AE6300-SW
Fixed type (FIX)	Horizontal (FIX)	●		●		
	Vertical terminal (FIX-VT)		▲		▲	–
	Vertical terminal adaptor (VTA)	▲		▲		
	Front terminal adaptor (FIX-FTA)	▲		▲		
Drawout type (DR)	Horizontal (DR)	●		●		
	Vertical terminal (DR-VT)	●	▲	▲	▲	▲
	Front terminal (DR-FT)	–		▲		
	Vertical terminal adaptor (VTA)	▲		▲		
	Front terminal adaptor (DR-FTA)	▲		▲		

● Available for the insulation ▲ Available for separating terminals Not existing type – Attachment is impossible

* No insulation function between upper and lower terminal.

Terminal Cover (TTC)

Option

The transparent terminal cover prevents from careless touching to the live control terminals.
Protection degree is IP20.

Mechanical interlock (MI)

Option

This is the device to prevent parallel charge of 2 or 3 units of breakers, and it can interlock the breakers mechanically without fail.
All combinations are available among any models from AE630-SW to AE6300-SW.
Please make inquiries about installation to AE4000-SW~AE6300-SW.
Further the interlock is possible among the different connection types or poles, such as fixed type or drawout type, 3 pole or 4 pole.
In combination with electric interlock, the higher safety interlock system can be secured.

- For drawout type, the interlock works at "CONNECTED" position, and in another position the interlock is released, which assures easy maintenance and inspection of the breaker.
- When turning OFF one breaker and then turning ON another breakers, please take an interval 0.5 seconds or more.
- MI for 3 breakers can not be installed by combining with Door Interlock (DI).

Breaker layout(630AF-4000AF)

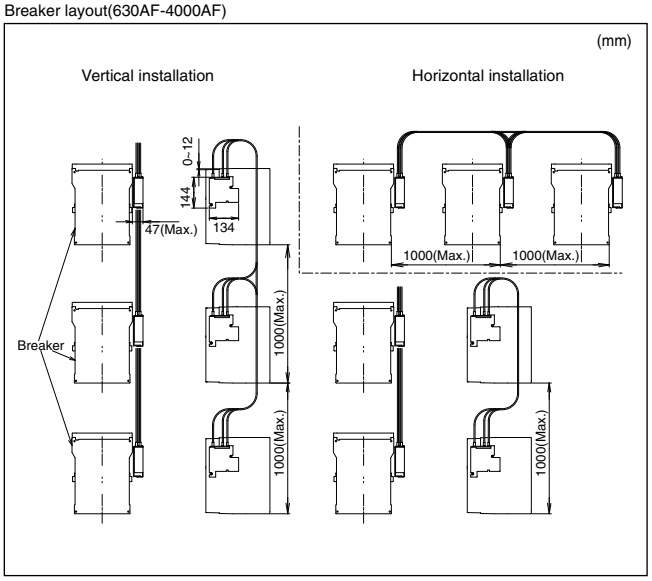

Interlock combinations

Switching states (for 2 ACBs)

Type	①	②	③
ACB1	○	|	○
ACB2	○	○	|

○ : ACB open
| : ACB closed

2 devices : 1 normal power supply and 1 emergency power supply

Switching states (for 3 ACBs)

Type	①	②	③	④	⑤	⑥	⑦
ACB1	○	|	○	○	|	|	○
ACB2	○	○	|	○	|	○	|
ACB3	○	○	○	|	○	|	|

3 devices : 2 sources and 1 coupling

Type	①	②	③	④
ACB1	○	|	○	○
ACB2	○	○	|	○
ACB3	○	○	○	|

3 devices : 3 sources,only 1 device closed

Type	①	②	③	④	⑤
ACB1	○	|	○	|	○
ACB2	○	○	|	○	○
ACB3	○	○	○	|	|

3 devices : 2 normal power supplies and 1 emergency power supply

Case circuit

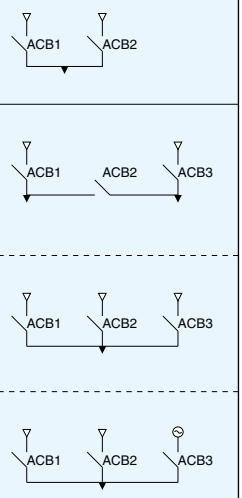

Condenser trip device (COT)

Please prepare by the customer. Refer to Page 15 for the specifications of combined SHT.

Dust cover (DUC)

Option

Dust cover prevents the dust or water entering into the panel board from the breaker panel cut.
Protection degree is IP54.

Accessories(for drawout type)

Drawout interlock (standard equipment)

This is the safety device that prevents insertion and drawout operation. When the breaker is ON, the drawout handle cannot be inserted, and insertion and drawout operation cannot be done unless the OFF button is pressed.

Position lock (standard equipment)

This is the device that locks automatically the drawout mechanism at "TEST" or "CONNECTED" positions during insertion and drawout operation. When the lock plate is pushed in, lock is released and operation can be continued.

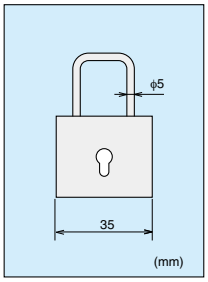

Outline dimensions (reference)

Padlock

* This padlock should be supplied by customer.

A padlock can be arranged at the lock plate. Thereby, it is possible to prevent the connection position from being changed unnecessarily.
As for outline dimensions of the padlock, please refer to the left figure.

Operating position of drawout type

CONNECTED position

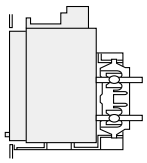

- Both main and control circuits are connected.
- Normal in use condition.
- Lock plate is protruding

TEST position

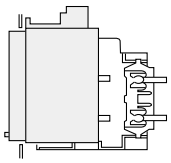

- Main circuit is disconnected, but the control circuit is connected.
- The breaker operation can be tested with the door closed.
- Lock plate is protruding

DISCONNECTED position

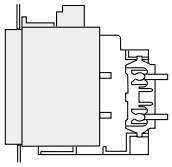

- Both main and control circuits are disconnected.
- The door can be closed.

DRAWOUT position

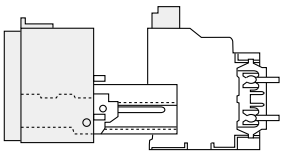

- This is the position for removing the breaker.
- The breaker is drawn out of the cradle on the extension rails.

Ground terminal is on right side of the cradle.

Cell switch (CL)

Option

This is the switch to show the drawout position (CONNECTED, TEST, and DISCONNECTED) of the breaker. An arbitrary combination up to 4 pieces is available.

Operating sequence

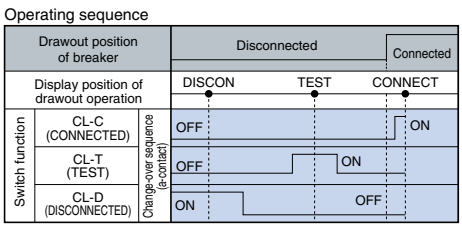

Note 1: The setting can be changed by customer later.
A preliminary setting of CL at factory shipment is as follows.
CL1:1C CL2:1C1D CL3:1C1T1D CL4:2C1T1D

Switch rating

Voltage (V)		Current (A)	
		Resistive load	Inductive load
AC	250	10	10
	125		
DC	250	3	1.5
	125	10	6
	30	10	10
Maximum contacts		Total 4c max.	

Standard pattern

	CL-C	CL-T	CL-D
CL1	1	–	–
CL2	1	–	1
CL3	1	1	1
CL4	2	1	1

Shorting b-contact (SBC)

Option

When moving the breaker from the connected to the test positions, this contact is used to short circuit auxiliary switch (AXb), thus maintaining the correct sequence of operation of the external control circuit. When ordering, SBC with the same number of contacts as auxiliary switches (AXb) will be provided. SBC can be provided for all AX b contacts. At the time of shipment from factory, SBC is already connected to control circuit terminal block.
Only one more crimp terminal can be added on contact, overlapping with SBC's contact on Terminal: 11~51.

Operating sequence

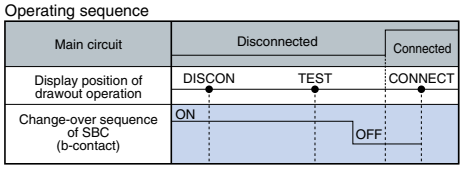

Switch rating

Voltage (V)		Current (A)	
		Resistive load	Inductive load
AC (50/60Hz)	250	10	2
	125	10	3
DC	250	0.2	0.2
	125	0.4	0.4
	30	4	3

Refer to the Min. load range graph in Page 16.

Lifting hook (HP)

Option

This is the metal fitting to suspend the main body when the breaker is removed from the drawout cradle. The fixed type breaker is equipped with HP as standard.

Safety shutter (SST)

Option

The safety shutters cover the conductors (cradle side) and prevent contact with them when the breaker is drawn out.

Safety shutter lock (SST-Lock)

Option

This kit is used to lock the safety shutters using 2 padlocks (the padlocks to be customer's supply). The safety shutters close when the breakers are drawn out to prevent accidental contact with the main contacts.

Mis-insertion preventor (MIP)

Option

This prevents other breakers unspecified from inserting into the cradle, and 5 patterns in maximum are available.
Not available for AE4000-SW~AE6300-SW

Test jumper (TJ)

Option

With the breaker taken out of its cradle, this device enables the breaker to be electrically opened and closed, and the operating sequence to be checked. 3m cable is equipped as standard shipment.

Electronic trip relay(Feature)

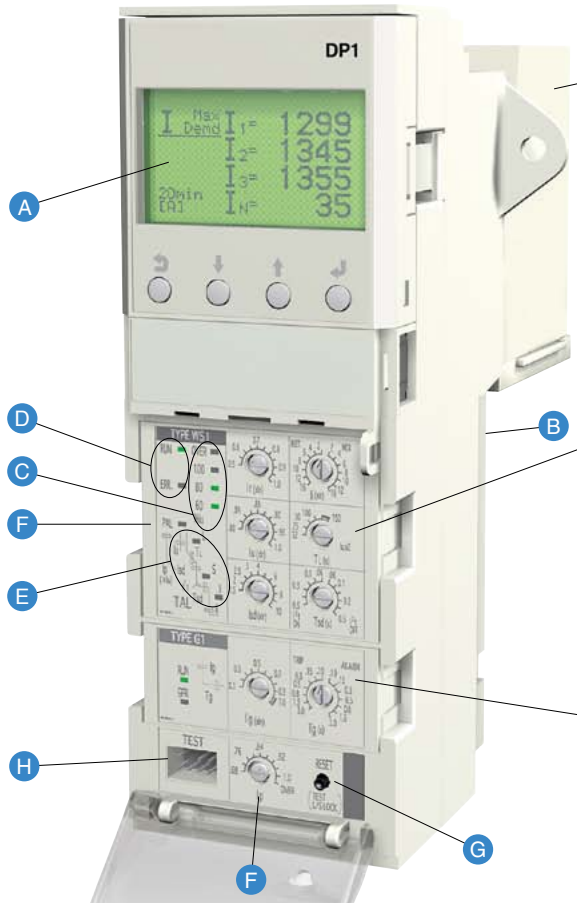

3 Power supply module

This module provides the control power source for Trip indicator LED and Additional function modules like EX1, DP1, etc..
Please select a Power supply type from P1 to P5, which include Power supplys with output contact or with SSR output contact for 200V DC.
(The Over current protection and Ground fault protection (GFR)* can work with power from Internal CT, even if Control power source is off.)
Note*) For Ground fault protection, it works under the rated current (In) setting of 0.2-1.0 without Control power source.

1 Main setting module

This module provides the characteristic setting function of Over current protection according to application.
The modules for general use (WS) and for generator protection use (WM) have the setting dials for LTD, STD and INST operating characteristics. And the module for special use (WB) has setting dials for INST only.
4 pole breaker provides Neutral 100% protection as standard, which becomes 50% protection when Optional setting module "N5" is installed.

2 Optional setting module (option)

With each optional setting modules, the following functions can be added respectively.
G1: Ground fault protection
N5: Neutral pole 50% protection
E1: Earth leakage protection in combination with ZCT
AP: 2nd Additional Pre-alarm

A Display (option)

Several measuring data (current, voltage, power etc) and alarms can be displayed with this module.

B Extension module (option)

This module is required to install VT unit, display module and each interface unit.

C Load current LED (standard)

This indicator shows the actual current-carrying level.

D RUN and ERR. LED (standard)

This indicator displays the ETR situation (Run or Error)

E Trip indicator LED (standard)

This indicator displays the trip cause. (Self-holding type)
If output contact for this Trip indicator is required, Power supply module should be selected from P3, P4 or P5.

F Pre-alarm (PAL LED and Current setting dial) (standard)

This indicator displays the Pre-Alarm situation when the setting current is exceeded. If output contact for this Pre-alarm is required, Power supply module should be selected from P3, P4 or P5. And by adding the Optional setting module "AP", 2nd Pre-alarm can be added.

G RESET button (standard)

With this Reset button, Trip indicator, Display data like fault cause and fault current and Pre-alarm are reseted. When Power supply module P3, P4 or P5 is equipped, the resetting from Control circuit terminal becomes possible. Additionally, this Reset button provides a lock function of LTD and STD characteristics on the INST testing with Mitsubishi Tester "Y-2005".

H TEST terminal (standard)

This Test terminal is used for the field testing of characteristics with Mitsubishi Tester "Y-2005" (refer to Page 36).

OCR alarm (AL) (standard)

When tripped by Over current, Ground fault (GFR) and Earth leakage (ER), this device outputs alarm signal.
There are two types of OCR alarms. One is Automatic reset type with 30ms one pulse output (standard) and the other is Manual reset type with self-holding (optional). For details, refer to Page 16.

Neutral pole overcurrent protection (NP) (standard)

When Harmonics in load current become higher, the current on Neutral pole may exceed the rated current. This Neutral pole overcurrent protection prevents the troubles caused by higher Harmonics.

Electronic trip relay (ETR) Type designation breakdown

□□ – □

Main setting module

WS1, WB1, WM1, WF1	AE630–1600-SW, AE2000–3200-SW, AE4000-SW
WS2, WB2, WM2, WF2	AE2000-SWA, AE4000-SWA, AE5000-SW
WS3, WB3, WM3, WF3	AE6300-SW

WS : General use
WM : Generator protection use
WB : INST only
WF : Protective coordination use

Optional setting module

G1: Ground fault protection
N5: Neutral pole 50% protection
E1: Earth leakage protection
AP: 2nd Additional Pre-alarm
NA: Without optional setting

ETR Auxiliary Equipment

☐ Temperature alarm(TAL)
☐ MCR switch(MCR-SW)

Power supply

P1: 100-240V AC·DC
P2: 24-60V DC
P3: 100-240V AC / 100-125V DC with output contact
P4: 24-60V DC with output contact
P5: 100-240V DC with output contact (SSR)

☐ Neutral CT(NCT)
☐ External ZCT

Additional function

☐ Extension module(EX1)
- ☐ Display(DP1)
- ☐ Display onto panel board(DP2)
- ☐ VT unit(VT)

Network

☐ BIF-CC
☐ BIF-PR
☐ BIF-MD

Wire system (when EX1 is specified)

EX1
- ☐ 3ϕ3W
- ☐ 3ϕ4W
- ☐ Normal connection
- ☐ Reverse connection

Characteristic table

① \ ②	NA Nothing	G1 Ground fault	E1 Earth leakage	AP 2nd additional Pre-alarm	N5 Neutral pole 50% protection
WS General use LTD+STD+ INST/MCR	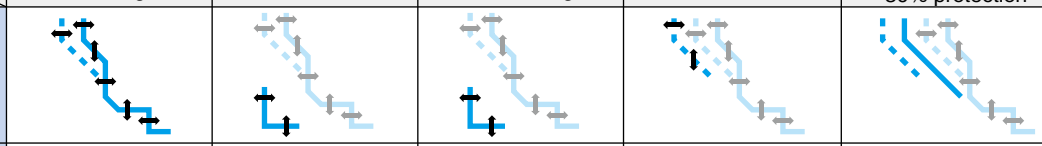				
WM Generator protection use LTD+STD+ INST/MCR	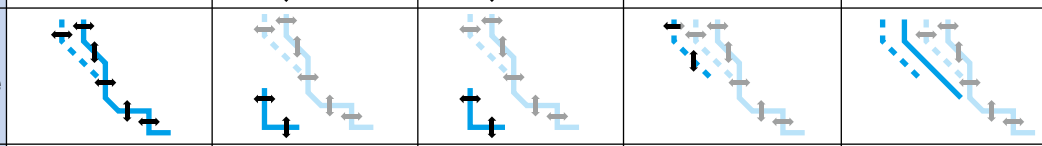				
WB Special use INST/MCR	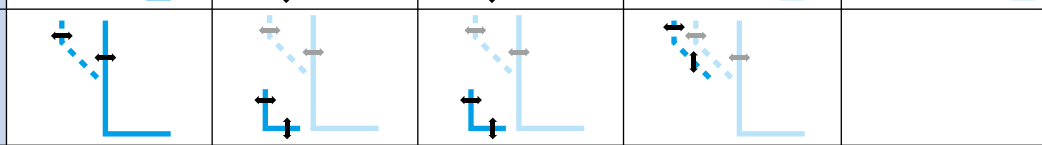				
WF Protective coordination use LTD+STD+ INST/MCR	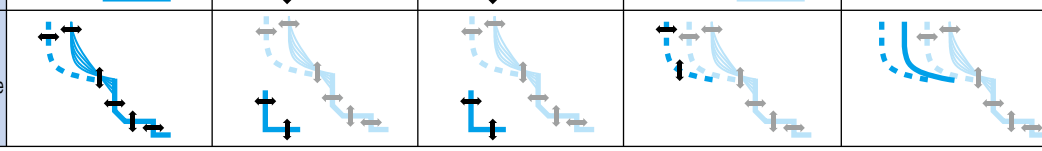				

Power supply module ③

Type	Rated Voltage (V)	Applicable Voltage range (V)	Criterion for Power requirement (VA)	Alarm output
P1	100-240 AC•DC	85-264 AC•DC	15	—
P2	24-60 DC	18-72 DC	10	—
P3	100-240 AC 100-125 DC	85-264 AC 85-138 DC	15	6 output contacts
P4	24-60 DC	18-72 DC	10	6 output contacts
P5	100-240 DC	85-264 DC	15	6 output contacts (SSR)

Note1: Over current protection and ground fault protection operates without control power source.
Note2: Factory setting of 6 output contacts is as follows.

① LTD	② STD/INST	③ G1/E1/AP	④ PAL	⑤ TAL	⑥ ERR
Self-holding	Self-holding	Refer to lower table	Automatic reset	Automatic reset	Automatic reset

ETR dial set	G1	E1	AP
TRIP side	Self-holding	Self-holding	—
ALARM side	Automatic reset	Automatic reset	Automatic reset

Self-holding:
The output is maintained until it resets.
Automatic reset:
The output will be reset if it backs to normal condition.

Contact capacity(Type P3 and P4)

Voltage(V)		Current (A)	
		Resistive load	Inductive load
		cosφ=1.0	cosφ=0.4 L/R=0.7
AC (50/60Hz)	240	1	0.5
	120	1	1
DC	125	0.1	0.05
	30	1	1

Current capacity(Type P5)

Voltage(V)		Normal current (A)	Peak inrush current (A)	ON resistance (Ω) (max.)
AC (50/60Hz)	240	0.1	0.3	5
	120	0.1	0.3	5
DC	240	0.1	0.3	5
	30	0.1	0.3	5

CT rating table

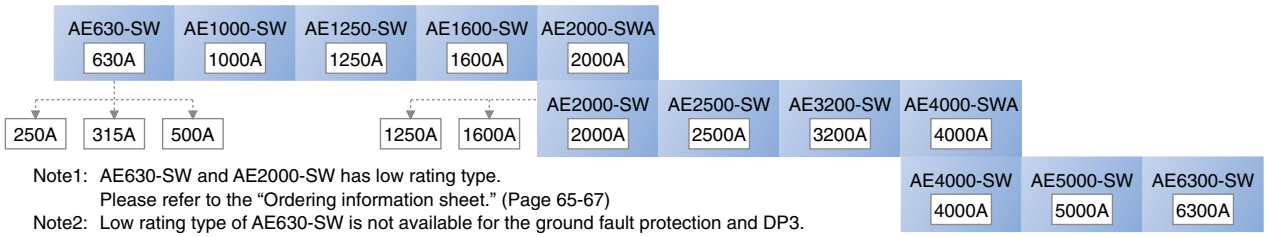

Note1: AE630-SW and AE2000-SW has low rating type.
Please refer to the "Ordering information sheet." (Page 65-67)
Note2: Low rating type of AE630-SW is not available for the ground fault protection and DP3.
Note3: As for details of ratings, refer to page 11 and page 12.

Electronic trip relay (ETR) for WS relay with Ampere Meter and Fault Memory (DP3)

■ **With ETR**

Type ☐ ☐ – ☐ ; DP3

● **Main setting**

WS1	AE630–1600-SW, AE2000–3200-SW, AE4000-SW
WS2	AE2000-SWA, AE4000-SWA, AE5000-SW
WS3	AE6300-SW

WS : General use

● **Optional setting**

G1: Ground fault protection
NA: Without optional setting

● **ETR Auxiliary Equipment**

☐ MCR switch (MCR-SW)

● **Power supply**

P1: 100-240V AC•DC
P2: 24-60V DC
P3: 100-240V AC / 100-125V DC with output contact
P4: 24-60V DC with output contact
P5: 100-240V DC with output contact (SSR)

Connection
☐ 3ϕ3W
☐ 3ϕ4W

☐ Neutral CT (NCT)

Note : For DP3, refer to page 25 on details.

Electronic trip relay (for general use : WS)

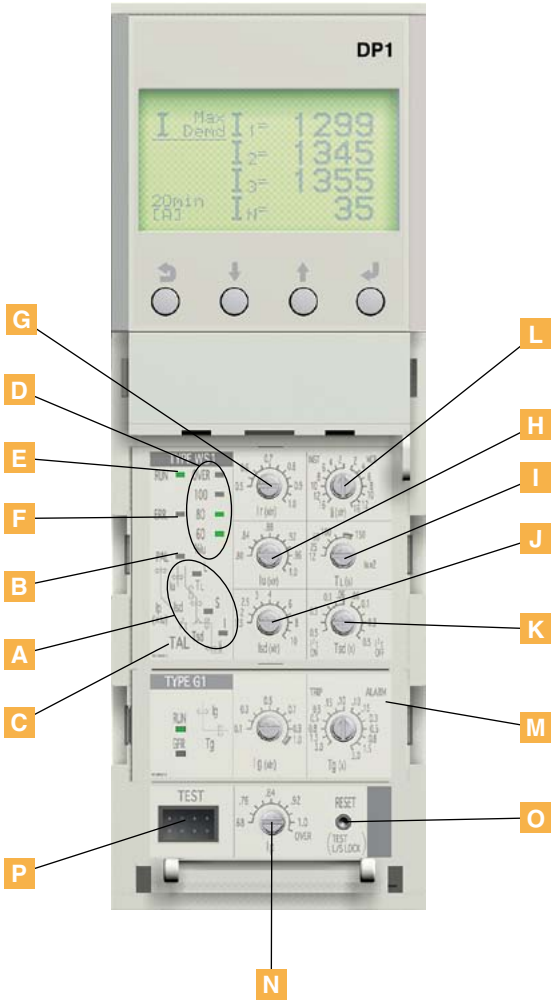

- **A** Trip indicator LED
- **B** Pre-alarm LED
- **C** Temperature alarm LED
- **D** Load current LED
- **E** RUN LED
- **F** ERR. LED
- **G** Current setting dial
- **H** Uninterrupted current setting dial
- **I** LTD time setting dial
- **J** STD pick-up setting dial
- **K** STD time setting dial
- **L** INST/MCR pick-up current setting dial
- **M** Optional setting module (P.33~35)
- **N** Pre-alarm current setting dial
- **O** RESET button (TEST L/S LOCK button)
- **P** TEST terminal

Note: The figure shows WS1 type with G1 module, Display (DP1) and MCR switch.
G1, DP1 and MCR are optional equipments.

Relation of setting dial

In (CT rating) — Ir — Ig (P.33)
Ir — Iu — Isd — Ii
Iu — Ip — Ip2 (P.35) — Load current LED (60, 80, 100%, OVER)

Adjustable setting range

No.	Setting item	Mark	Adjustable setting range	Accuracy	Factory default value
G	Current setting	Ir	0.5 ~ 1.0 (0.05step) x In (CT rating)	—	1.0
H	Uninterrupted current	Iu	0.8 ~ 1.0 x Ir (0.02step), Pick-up current : 1.15 x Iu	1.05 x Iu···Non Pick-up 1.25 x Iu···Pick-up	1.0
I	LTD time	T_L	12–25–50–100–150s at Iu x 2	± 20%	150
J	STD pick-up current	Isd	1.5–2–2.5–3–4–5–6–7–8–9–10 x Ir	± 15%	10
K	STD time	Tsd	0.5–0.4–0.3–0.2–0.1–0.06 (I²t ON) – 0.06–0.1–0.2–0.3–0.4–0.5s (I²t OFF) at Isd x 1.5	± 20% It operates in the range between 0.04 and 0.08s when the time set at 0.06s.	0.5 (I²t ON)
L	INST/MCR pick-up current	Ii	AE630-SW~AE1600-SW AE2000-SW~AE3200-SW AE4000-SW 16-12-10-8-6-4-2 (INST) - 2-4-6-8-10-12-16 (MCR) x Ir WS1	± 15%	WS1···16 (INST)
			AE2000-SWA, AE4000-SWA AE5000-SW 12-10-8-6-4-2 (INST) - 2-4-6-8-10-12 (MCR) x Ir WS2		WS2···12 (INST)
			AE6300-SW 10-8-6-4-2 (INST) - 2-4-6-8-10 (MCR) x Ir WS3		WS3···10 (INST)
N	Pre-alarm current	Ip	Iu x 0.68 ~ 1.0 (0.04step) –OVER	± 10%	OVER
—	Pre-alarm time	Tp	1/2 T_L at Iu x 2 (after 1/2 T_L, PAL contact output turns on.)	± 20%	—

The table and the figure include both optional display and MCR.
For WS relay, Pre-alarm current "OVER" setting is Iu x 1.15.

■Operating characteristic curve (for general use : WS)

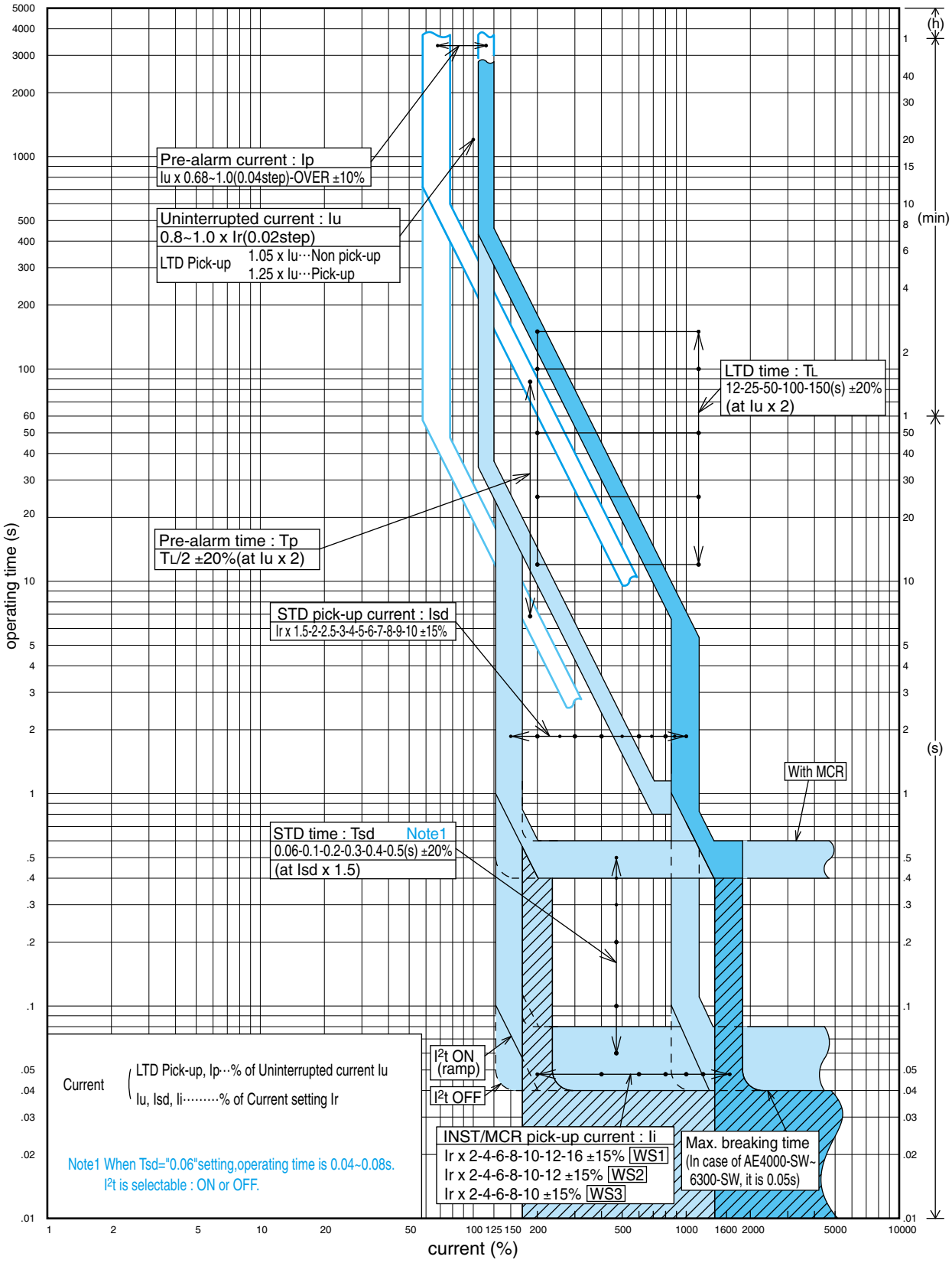

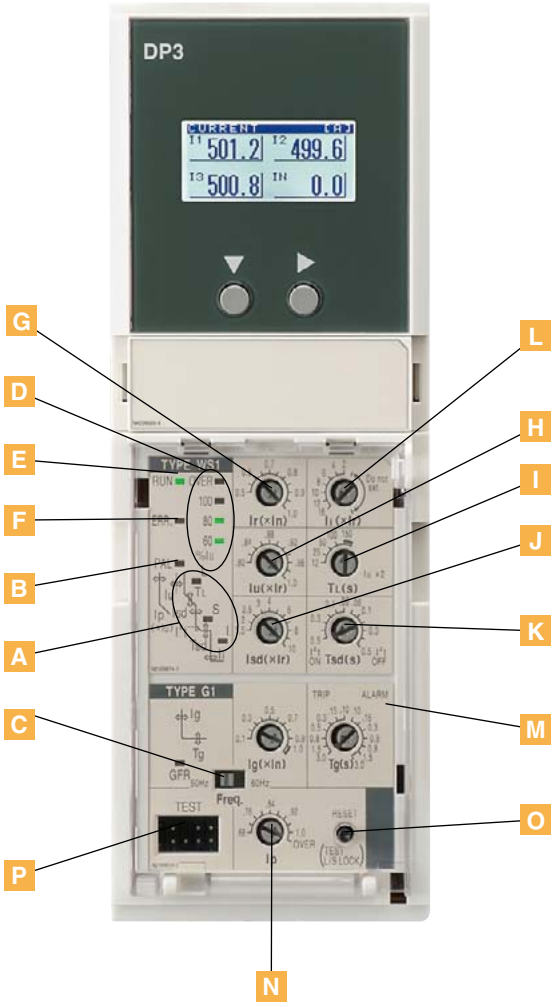

- **A** Trip indicator LED
- **B** Pre-alarm LED
- **C** Frequency selector switch
- **D** Load current LED
- **E** RUN LED
- **F** ERR. LED
- **G** Current setting dial
- **H** Uninterrupted current setting dial
- **I** LTD time setting dial
- **J** STD pick-up setting dial
- **K** STD time setting dial
- **L** INST/MCR pick-up current setting dial
- **M** Optional setting (P.33)
- **N** Pre-alarm current setting dial
- **O** RESET button (TEST L/S LOCK button)
- **P** TEST terminal

Note: The figure shows WS1 type with DP3 that equipped with G1.
For optional setting, only G1 and MCR are available for WS relay with DP3.

Relation of setting dial

In (CT rating) — Ir — Ig (P.33)
Ir — Iu — Isd — Ii
Iu — Ip — Load current LED (60, 80, 100%, OVER)

Adjustable setting range

No.	Setting item	Mark	Adjustable setting range	Accuracy	Factory default value
G	Current setting	Ir	0.5 ~ 1.0 (0.05step) x In (CT rating)	—	1.0
H	Uninterrupted current	Iu	0.8 ~ 1.0 x Ir (0.02step), Pick-up current : 1.15 x Iu	1.05 x Iu···Non Pick-up 1.25 x Iu···Pick-up	1.0
I	LTD time	T_L	12–25–50–100–150s at Iu x 2	± 20%	150
J	STD pick-up current	Isd	1.5–2–2.5–3–4–5–6–7–8–9–10 x Ir	± 15%	10
K	STD time	Tsd	0.5–0.4–0.3–0.2–0.1–0.06 (I²t ON) – 0.06–0.1–0.2–0.3–0.4–0.5s (I²t OFF) at Isd x 1.5	± 20% It operates in the range between 0.04 and 0.08s when the time set at 0.06s.	0.5 (I²t ON)
L	INST/MCR pick-up current	Ii	AE630-SW~AE1600-SW AE2000-SW~AE3200-SW AE4000-SW 16-12-10-8-6-4-2 (INST) - 2-4-6-8-10-12-16 (MCR) x Ir WS1	± 15%	WS1···16 (INST)
			AE2000-SWA, AE4000-SWA AE5000-SW 12-10-8-6-4-2 (INST) - 2-4-6-8-10-12 (MCR) x Ir WS2		WS2···12 (INST)
			AE6300-SW 10-8-6-4-2 (INST) - 2-4-6-8-10 (MCR) x Ir WS3		WS3···10 (INST)
N	Pre-alarm current	Ip	Iu x 0.68 ~ 1.0 (0.04step) –OVER	± 10%	OVER
—	Pre-alarm time	Tp	1/2 T_L at Iu x 2 (after 1/2 T_L, PAL contact output turns on.)	± 20%	—

The table and the figure include both optional display and MCR.
For WS relay, Pre-alarm current "OVER" setting is Iu x 1.15.

■Operating characteristic curve
(for general use : WS relay with Ampere Meter and Fault Memory "DP3")

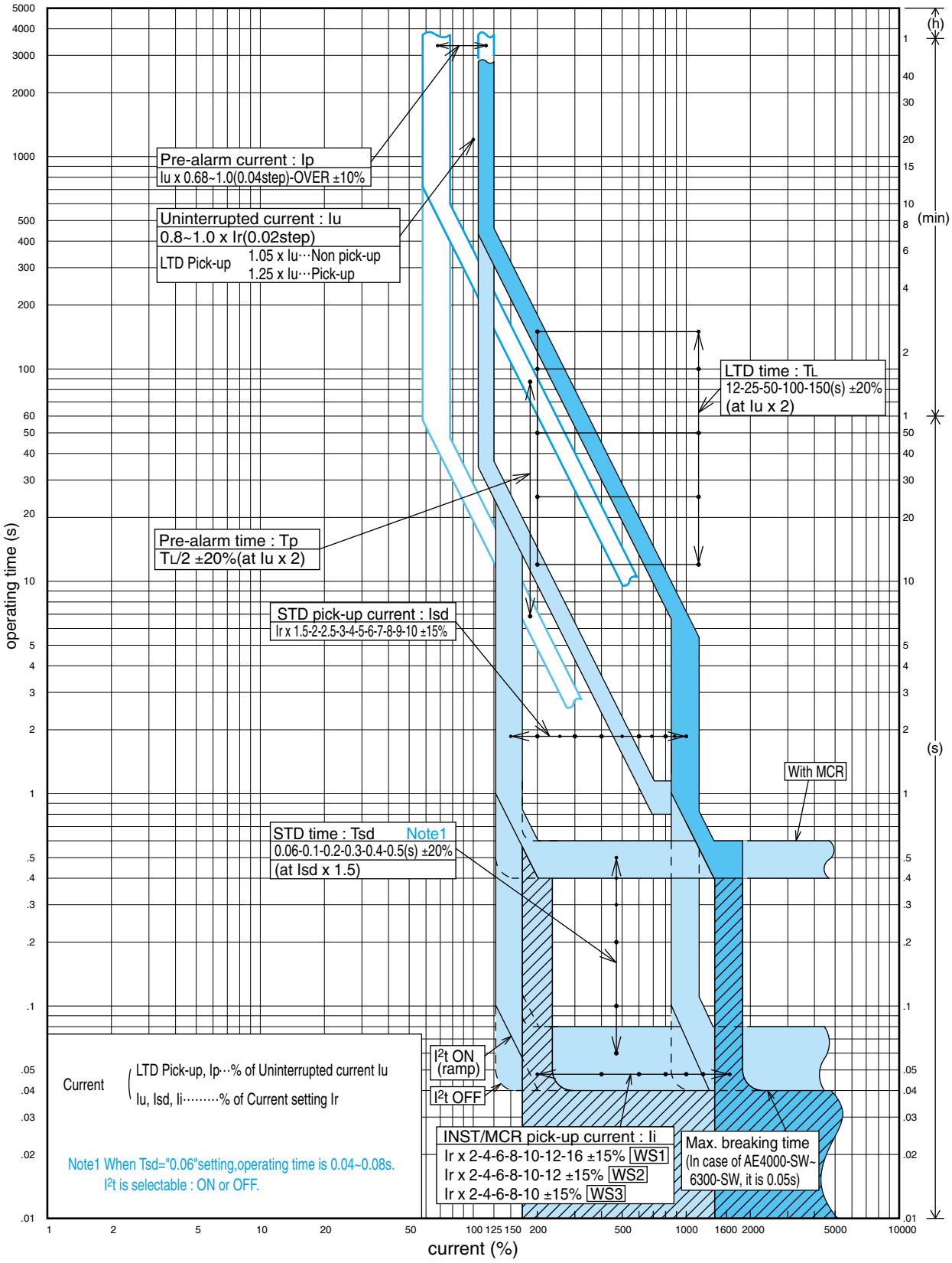

Electronic trip relay (for generator protection use : WM)

This WM relay is mainly used for the protection of generator on ship.
Current setting Ir (default value) is fixed at the value complying with the rating of generator, which should be indicated when placing an order.

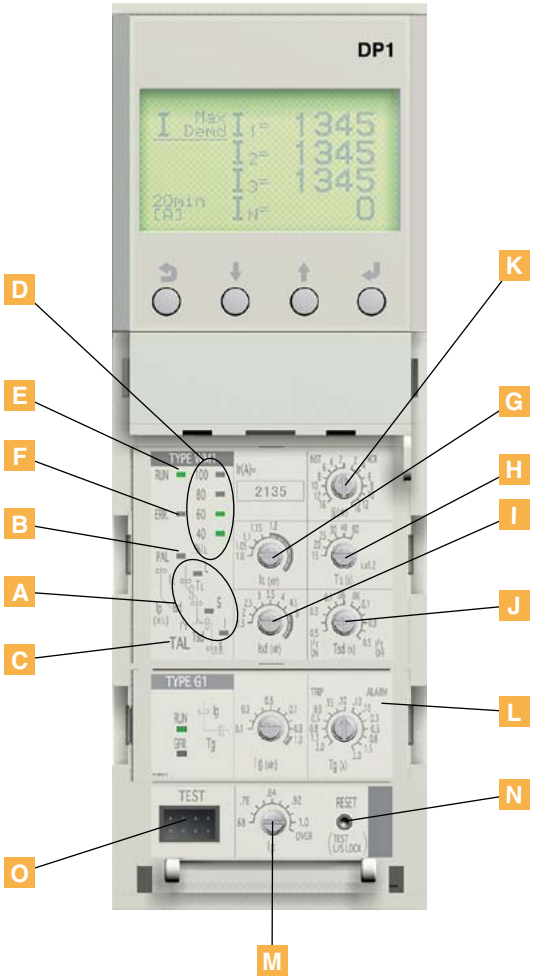

- A Trip indicator LED
- B Pre-alarm LED
- C Temperature alarm LED
- D Load current LED
- E RUN LED
- F ERR. LED
- G LTD pick-up current
- H LTD time setting dial
- I STD pick-up setting dial
- J STD time setting dial
- K INST/MCR pick-up current setting dial
- L Optional setting module (P.33~35)
- M Pre-alarm current setting dial
- N RESET button (TEST L/S LOCK button)
- O TEST terminal

Note: The figure shows WM1 type with G1 module, Display (DP1) and MCR switch.
G1, DP1 and MCR are optional equipments.

Relation of setting dial

In (CT rating) — Ir (Fixed) — IL — Ip
- Ir (Fixed) — Ig (P.33)
- IL — Isd — Ip2 (P.35)
- IL — Ii — Load current LED (40, 60, 80, 100%)

Adjustable setting range

No.	Setting item	Mark	Adjustable setting range	Accuracy	Factory default value
—	Current setting	Ir	To be fixed at Factory default value in the available range, which shows in Page 9 and 10.	—	To be complied with ordering indication
G	LTD pick-up current	IL	1.0–1.05–1.1–1.15–1.2 x Ir	± 5%	1.15
H	LTD time	TL	15–20–25–30–40–60s at IL x 1.2	± 20%	20
I	STD pick-up current	Isd	1.5–2–2.5–3–3.5–4–4.5–5 x Ir	± 15%	5
J	STD time	Tsd	0.5–0.4–0.3–0.2–0.1–0.06 (I²t ON) – 0.06–0.1–0.2–0.3–0.4–0.5s (I²t OFF) at Isd x 1.5	± 20% It operates in the range between 0.04 and 0.08s when the time set at 0.06s.	0.5 (I²t ON)
K	INST/MCR pick-up current	Ii	AE630-SW~AE1600-SW, AE2000-SW~AE3200-SW, AE4000-SW: 16-12-10-8-6-4-2 (INST) - 2-4-6-8-10-12-16 (MCR) x Ir WM1	± 15%	WM1···16 (INST)
			AE2000-SWA, AE4000-SWA, AE5000-SW: 12-10-8-6-4-2 (INST) - 2-4-6-8-10-12 (MCR) x Ir WM2		WM2···12 (INST)
			AE6300-SW: 10-8-6-4-2 (INST) - 2-4-6-8-10 (MCR) x Ir WM3		WM3···10 (INST)
M	Pre-alarm current	Ip	IL x 0.68 ~ 1.0 (0.04step) –OVER	± 5%	OVER
—	Pre-alarm time	Tp	1/2 TL at IL x 1.2 (after 1/2 TL, PAL contact output turns on.)	± 20%	—

The table and the figure include both optional display and MCR.
For WM relay only, when Pre-alarm current Ip is set at "OVER", the Ip value becomes equal to "IL x 1.0".

■Operating characteristic curve (for generator protection use : WM)

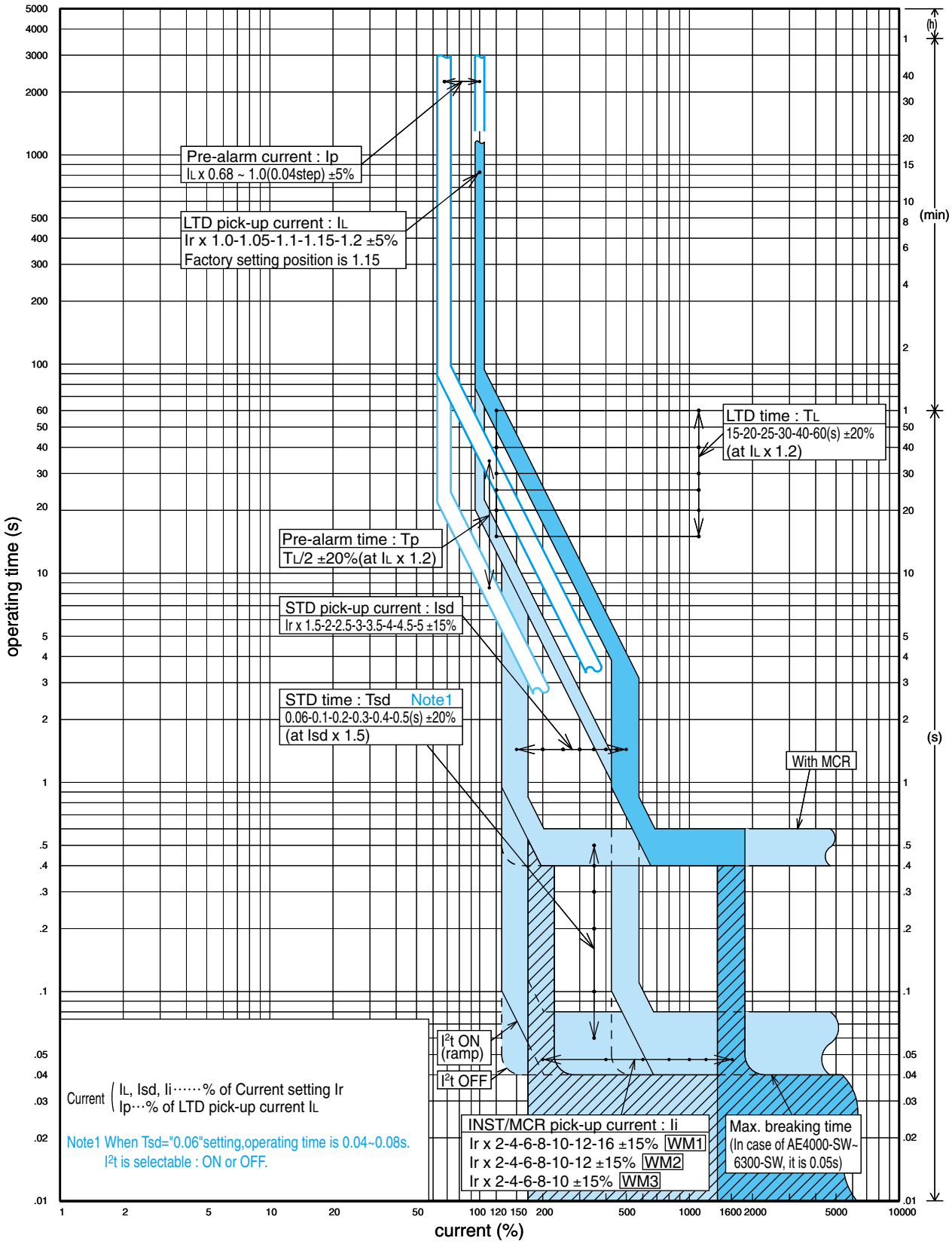

Electronic trip relay (for special use : WB)

This WB relay is effective for the combination with the external OCR without severely decreasing the breaking capacity.
Actually, if ACB is combined with the external OCR only without WB relay, its breaking capacity comes to be reduced drastically. (e.g. For AE1600-SW, it's reduced to 25kA.)

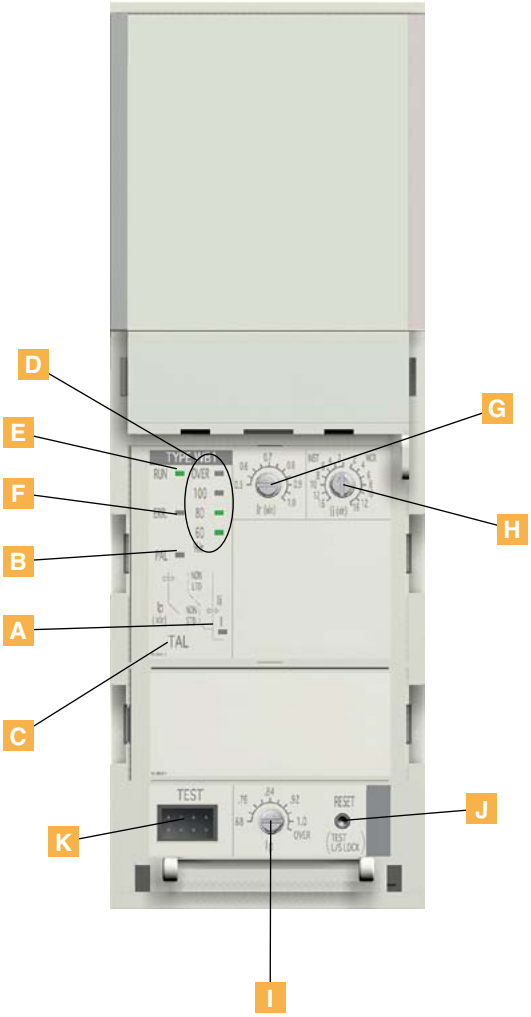

- A Trip indicator LED
- B Pre-alarm LED
- C Temperature alarm LED
- D Load current LED
- E RUN LED
- F ERR. LED
- G Current setting dial
- H INST/MCR pick-up current setting dial
- I Pre-alarm current setting dial
- J RESET button
- K TEST terminal

Note: The figure shows WB1 type with MCR switch.
MCR is optional equipment.

Relation of setting dial

In (CT rating) — Ir — Ii
Ir — Ig (P.33) — Ip
Ip2 (P.35)
Load current LED (60, 80, 100%, OVER)

Adjustable setting range

No.	Setting item	Mark	Adjustable setting range	Accuracy	Factory default value
G	Current setting	Ir	0.5 ~ 1.0 (0.05step) x In (CT rating)	—	1.0
H	INST/MCR pick-up current	Ii	AE630-SW~AE1600-SW, AE2000-SW~AE3200-SW, AE4000-SW: 16-12-10-8-6-4-2 (INST) / 2-4-6-8-10-12-16 (MCR) x Ir WB1	± 15%	WB1···16 (INST)
			AE2000-SWA, AE4000-SWA, AE5000-SW: 12-10-8-6-4-2 (INST) / 2-4-6-8-10-12 (MCR) x Ir WB2		WB2···12 (INST)
			AE6300-SW: 10-8-6-4-2 (INST) / 2-4-6-8-10 (MCR) x Ir WB3		WB3···10 (INST)
I	Pre-alarm current	Ip	Ir x 0.68 ~ 1.0 (0.04step) –OVER	± 10%	OVER
–	Pre-alarm time	Tp	75s at Ir x 2 (after 75s, PAL contact output turns on.)	± 20%	—

The table and the figure include both optional display and MCR.
For WB relay, when Pre-alarm current Ip is set at "OVER", the Ip value is "Ir x 1.15".

■Operating characteristic curve (for special use : WB)

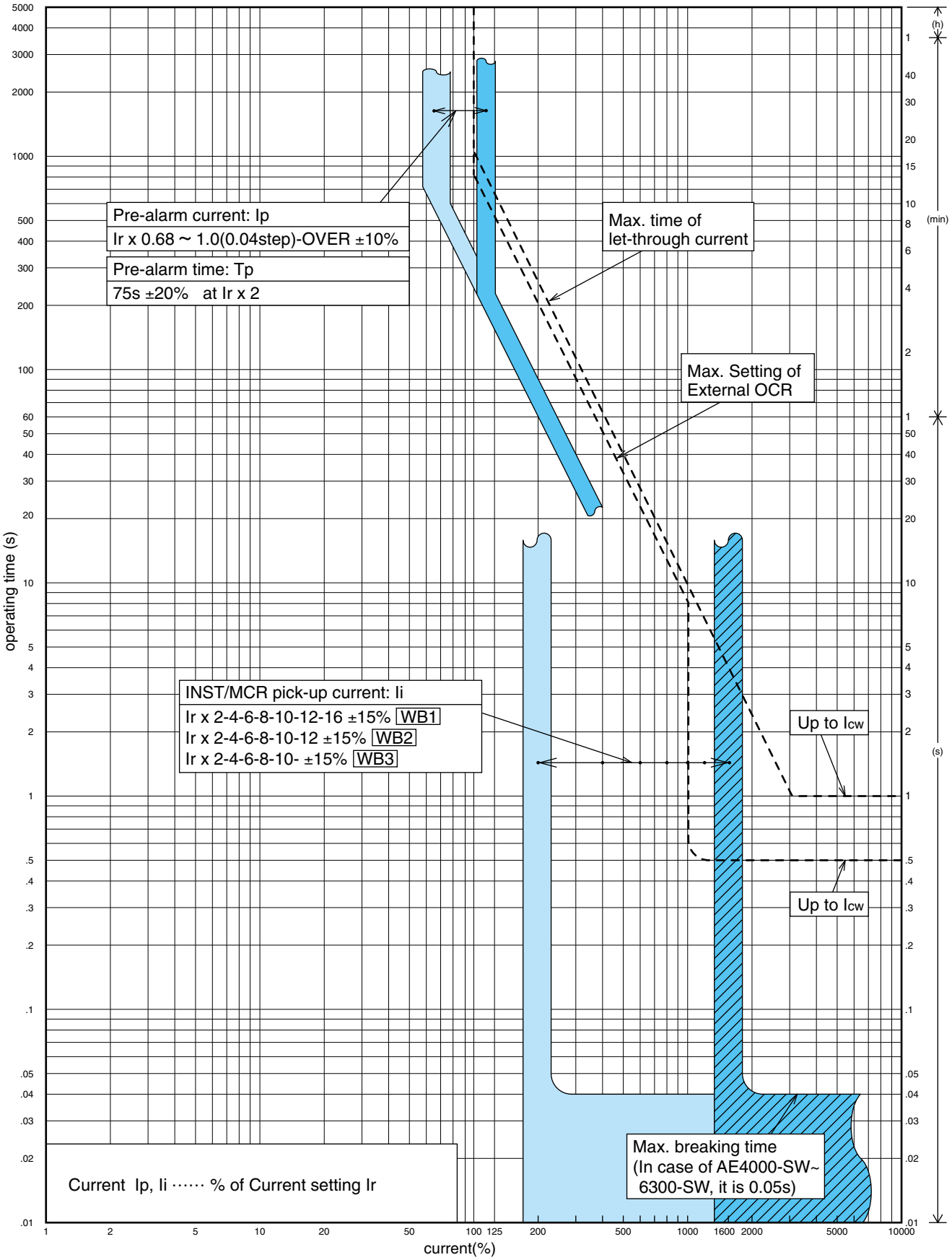

Electronic trip relay (for protective coordination use : WF)

WF relay incorporates five kinds of LTD characteristics.
Protective coordination with upstream OCRs and/or Fuses can be more easily achieved.

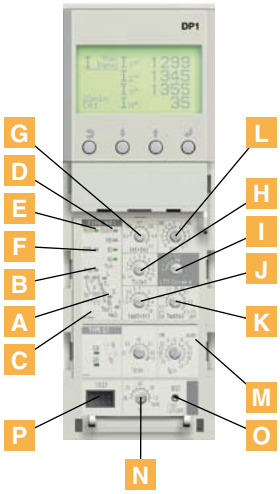

The selectable characteristics are the following five curves.

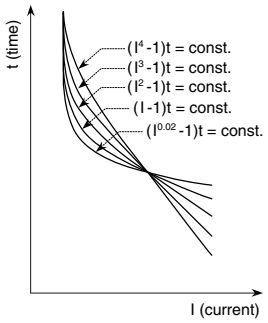

LTD characteristics curves

LTD curve can be selected by the LTD curve setting dial.

- A Trip indicator LED
- B Pre-alarm LED
- C Temperature alarm LED
- D Load current LED
- E RUN LED
- F ERR. LED
- G Current setting dial
- H LTD time setting dial
- I LTD curve setting dial
- J STD pick-up setting dial
- K STD time setting dial
- L INST/MCR pick-up current setting dial
- M Optional setting module (P.33~35)
- N Pre-alarm current setting dial
- O RESET button (TEST L/S LOCK button)
- P TEST terminal

Note: The figure shows WF1 type with G1 module, Display (DP1) and MCR switch. G1, DP1 and MCR are optional equipments.

Relation of setting dial

In (CT rating) — Ir — Ig (P.33); Isd; Ii; Ip; Ip2 (P.35); Load current LED (60, 80, 100%, OVER)

■Operating characteristic curve

[LTD curve setting "a=2"]

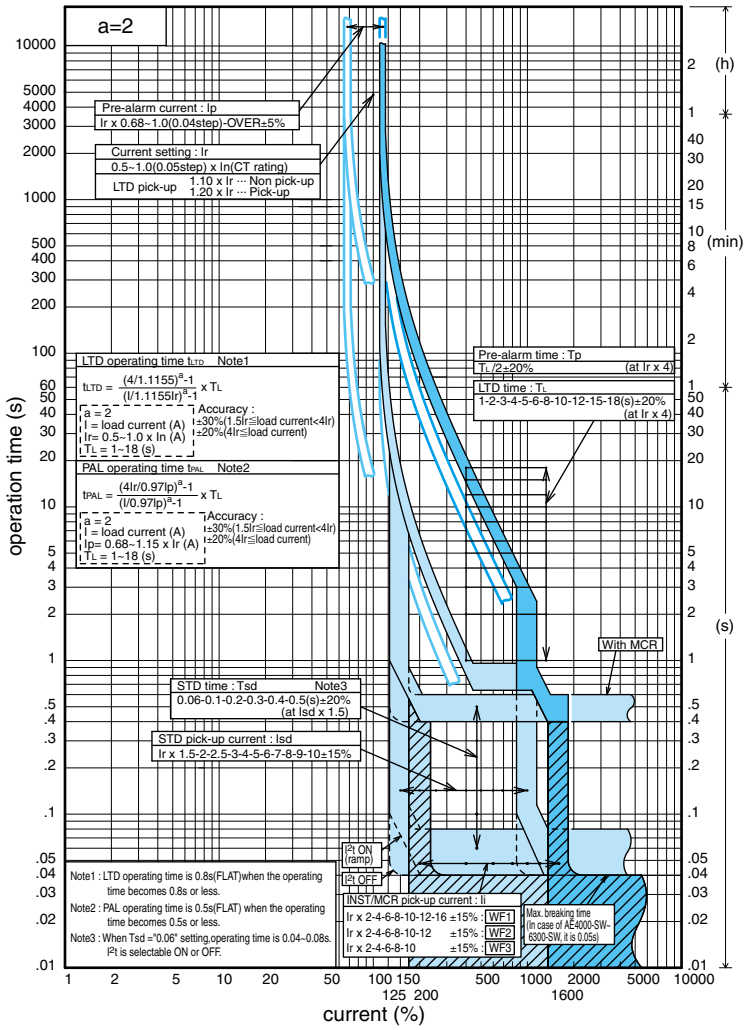

Adjustable setting range

No.	Setting item	Mark	Adjustable setting range	Accuracy	Factory default value
G	Current setting	Ir	0.5 ~ 1.0 (0.05step) x In (CT rating) LTD pick-up current : 1.15 x Ir	1.10 x Ir···Non Pick-up 1.20 x Ir···Pick-up	1.0
H	LTD time	TL	1–2–3–4–5–6–8–10–12–15–18s at Ir x 4	± 30% (1.5Ir≦load current<4Ir) ± 20% (4Ir≦load current)	18
I	LTD curve setting	a	0.02–1–2–3–4	—	2
J	STD pick-up current	Isd	1.5–2–2.5–3–4–5–6–7–8–9–10 x Ir	± 15%	10
K	STD time	Tsd	0.5–0.4–0.3–0.2–0.1–0.06 (I²t ON) – 0.06–0.1–0.2–0.3–0.4–0.5s (I²t OFF) at Isd x 1.5	± 20% It operates in the range between 0.04 and 0.08 when the time set at 0.06s.	0.5 (I²t ON)
L	INST/MCR pick-up current	Ii	AE630-SW~AE1600-SW AE2000-SW~AE3200-SW AE4000-SW 16-12-10-8-6-4-2 (INST) - 2-4-6-8-10-12-16 (MCR) x Ir WF1	± 15%	WF1···16 (INST)
			AE2000-SWA, AE4000-SWA AE5000-SW 12-10-8-6-4-2 (INST) - 2-4-6-8-10-12 (MCR) x Ir WF2		WF2···12 (INST)
			AE6300-SW 10-8-6-4-2 (INST) - 2-4-6-8-10 (MCR) x Ir WF3		WF3···10 (INST)
N	Pre-alarm current	Ip	Ir x 0.68 ~ 1.0 (0.04step) –OVER	± 5%	OVER
—	Pre-alarm time	Tp	1/2 TL at Ir x 4 (after 1/2 TL, PAL contact output turns on.)	± 30% (1.5Ir≦load current<4Ir) ± 20% (4Ir≦load current)	—

The table and the figure include both optional display and MCR.
For WF relay, when Pre-alarm current Ip is set at "OVER", the Ip value is "Ir x 1.15".

■Operating characteristic curve (for protective coordination use : WF)

[LTD curve setting "a=0.02"]

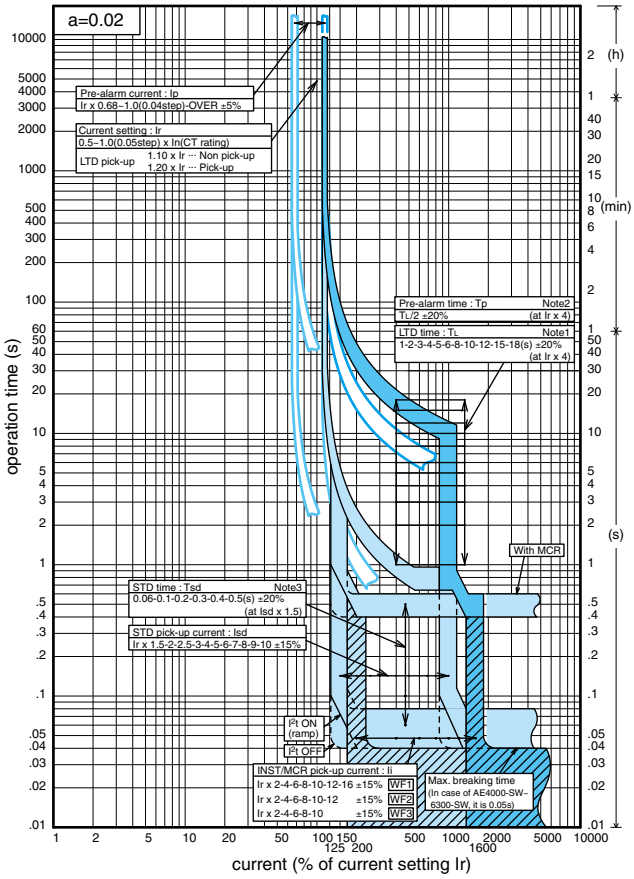

[LTD curve setting "a=1"]

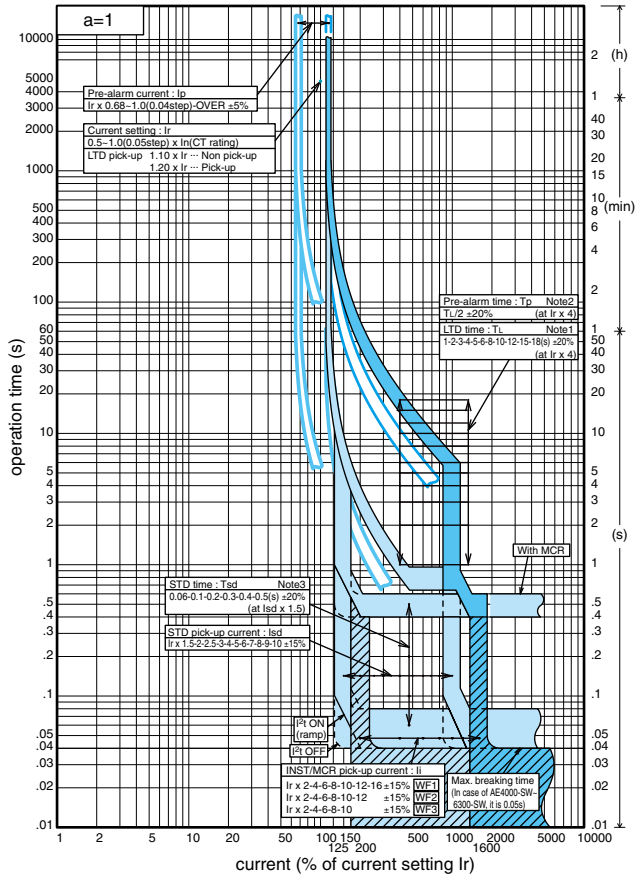

[LTD curve setting "a=3"]

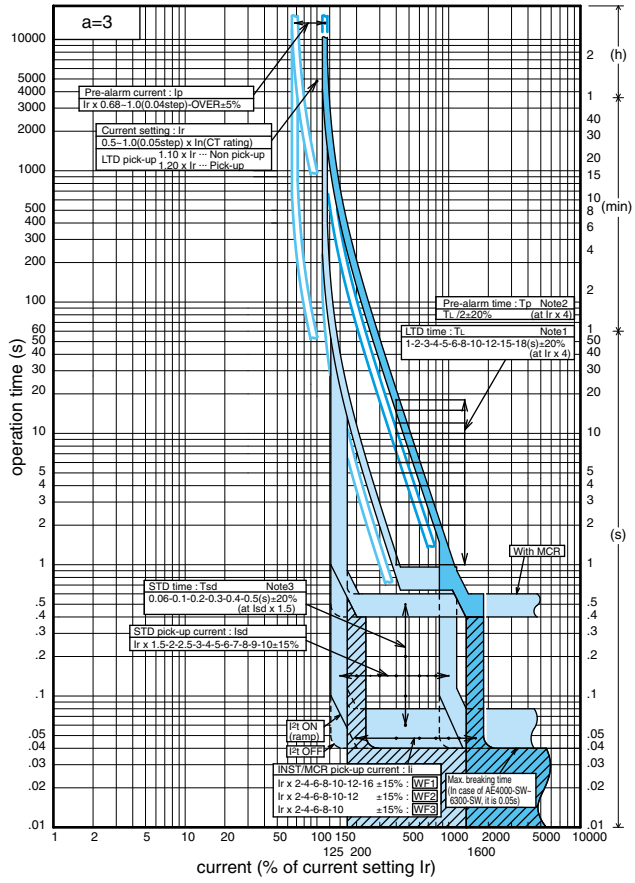

[LTD curve setting "a=4"]

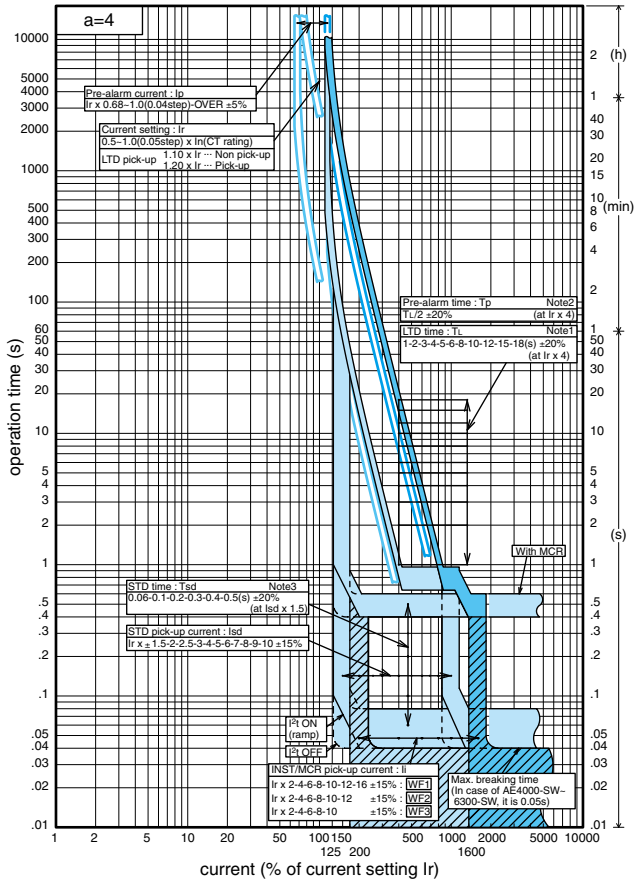

Note 1: LTD operating time t_{LTD} is calculated by the following equations.

$$t_{LTD} = \frac{(4/1.1155)^a - 1}{(I/1.1155Ir)^a - 1} \times T_L$$

a = LTD curve setting
I = load current (A)
Ir = 0.5~1.0 x In (A)
T_L = 1~18 (s)

The accuracy of operating time is ±30% (1.5Ir≦load current<4Ir) or ±20% (4Ir≦load current).
LTD operating time is 0.8s(FLAT) when the operating time becomes 0.8s or less.

Note 2: PAL operating time t_{PAL} is calculated by the following equations.

$$t_{PAL} = \frac{(4Ir/0.97Ip)^a - 1}{(I/0.97Ip)^a - 1} \times \frac{T_L}{2}$$

a = LTD curve setting
I = load current (A)
Ir = 0.5~1.0 x In (A)
Ip = 0.68~1.15 x Ir (A)
T_L = 1~18 (s)

The accuracy of operating time is ±30% (1.5Ir≦load current<4Ir) or ±20% (4Ir≦load current).
PAL operating time is 0.5s(FLAT) when the operating time becomes 0.5s or less.

Note 3: When Tsd = "0.06" setting, operating time is 0.04~0.08s.
I²t is selectable : ON or OFF.

Accessories

Ground fault protection (GFR)

Option

The ground fault protection (GFR) of several hundred amperes is possible. This function can be selected for trip and alarm (no trip). Power supply is necessary for this function, even if there is not power supply, it can function at 0.2xIn or higher.

Setting item	Mark	Adjustable setting range	Accuracy	Factory default value
GFR pick-up current	Ig	0.1-0.2-0.3-0.4-0.5-0.6-0.7-0.8-0.9-1.0 x In	±20%	1.0
GFR time	Tg	3-1.5-0.8-0.5-0.3-0.15-<0.1 (TRIP) - <0.1-0.15-0.3-0.5-0.8-1.5-3s (ALARM) (at 1.5 x Ig)	±20%	3s (TRIP)
alarm output	—	TRIP side : Self-holding/ALARM side : Automatic reset	—	TRIP side (Self-holding)

Neutral CT (NCT) ※Only use for AE-SW

Option

The Neutral CT is used for ground fault protection when the 3 pole breaker is used on a 3 phase 4 wires system and for over current protection on N phase. Please use this CT in combination with ground fault protection (GFR). As for outline dimensions, refer to page 56.
The length of the cable (attached) for NCT is 2m.

GFR function block diagram (In case of 4pole breaker)

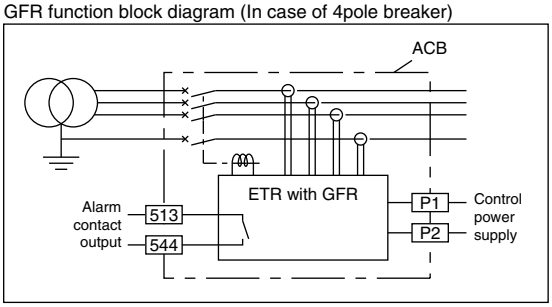

Block diagram with NCT function

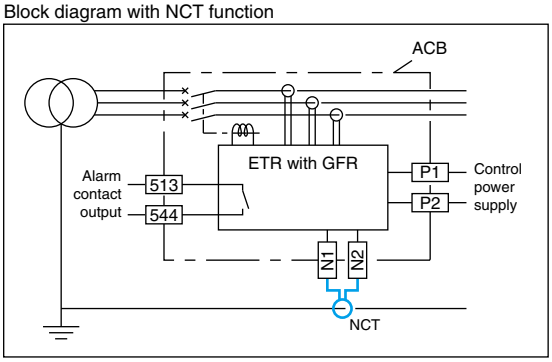

Ground fault protection characteristics

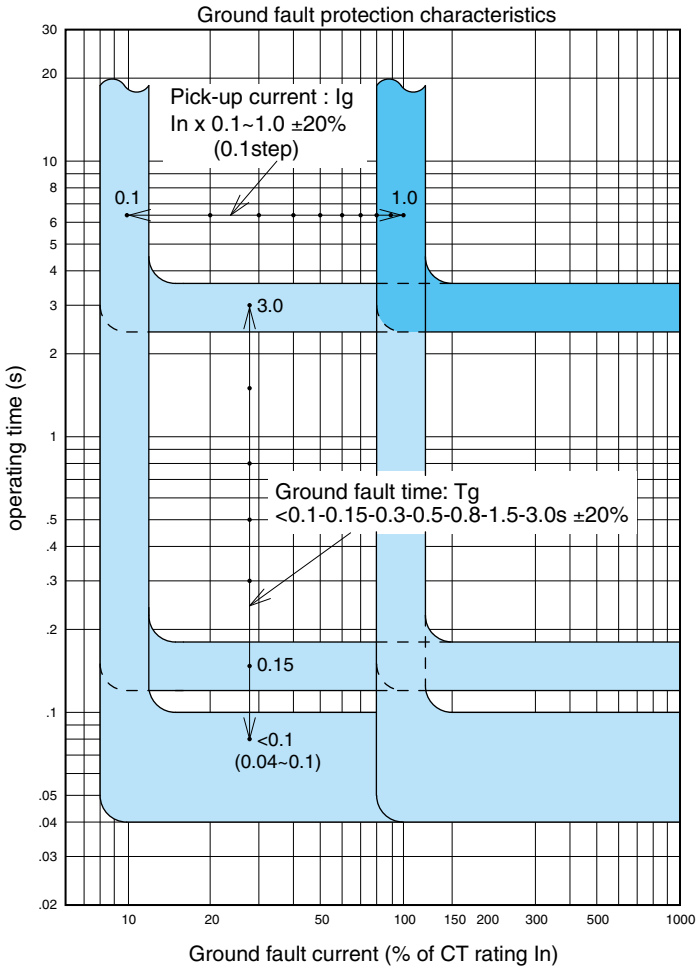

NCT type name

NCT type name	ACB type name / CT rating		
NCT06	AE630-SW 630A		
NCT10	AE1000-SW 1000A		
NCT12	AE1250-SW 1250A	AE2000-SW 1250A	
NCT16	AE1600-SW 1600A	AE2000-SW 1600A	
NCT20	AE2000-SWA 2000A	AE2000-SW 2000A	
NCT25		AE2500-SW 2500A	
NCT32		AE3200-SW 3200A	
NCT40		AE4000-SWA 4000A	AE4000-SW 4000A
NCT50			AE5000-SW 5000A
NCT63			AE6300-SW 6300A

Refer to Outline dimensions in page 56.

Earth leakage protection (ER)

Option

By combining the ETR with earth leakage protection (ER) and External ZCT, earth leakage protection is possible. Earth leakage protection, earth leakage tripping and earth leakage alarm can be selected. Control supply is necessary for this function.

Setting item	Mark	Adjustable setting range	Accuracy	Factory default value
ER pick-up current	IΔn	1A-2A-3A-5A-10A	0 –30%	10A
ER time	Te	3-1.5-0.8-0.5-0.3-0.15-<0.1 (TRIP) - <0.1-0.15-0.3-0.5-0.8-1.5-3s (ALARM) (at 1.5 x IΔn)	±20%	3s (TRIP)
alarm output	—	TRIP side : Self-holding/ALARM side : Automatic reset	—	TRIP side (Self-holding)

External ZCT

Option

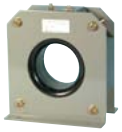

This option is used to detect several amperes of earth leakage when used in combination with a electronic trip relay that has the earth leakage tripping (ER) option.
Two methods are available. The first is where the all load conductors pass through the ZCT.
The other method uses a smaller ZCT through which the supply transformer's ground wire passes through to the earth.

ZCT for load circuit

ZCT type name	ACB type name
ZCT163	AE630-SW ~ AE1600-SW 3-pole
ZCT323	AE630-SW ~ AE1600-SW 4-pole AE2000-SW ~ AE3200-SW 3-pole
ZCT324	AE2000-SW ~ AE3200-SW 4-pole

As for outline dimensions refer to page 56. Make a choice of suitable ZCT in comformity to the BUSBAR size.

ZCT for transformer ground wire

ZT15B	ZT30B	ZT40B	ZT60B	ZT80B	ZT100B

ZCT with primary conductors

ZCT type name	ACB type name / Pole
ZTA1200A	AE630-SW / 3P, AE1000-SW / 3P
ZTA2000A	AE1250-SW / 3P, AE1600-SW / 3P AE2000-SWA / 3P, AE2000-SW / 3P

ER function block diagram (for load circuit method)

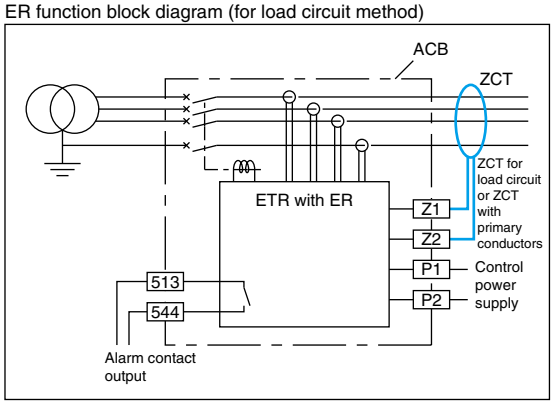

ER function block diagram (transformer ground wire method)

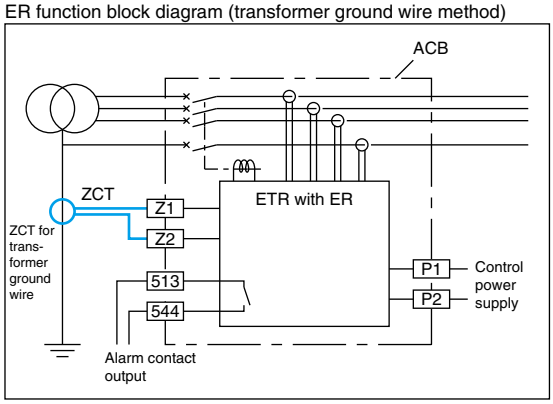

On a circuit containing harmonic content, the zero-phase current transformer (ZCT) of the circuit breaker will be overheated owing to iron loss. Use circuit breakers at a load device leakage current distortion of 5kHz or less and at 3A or less.

Earth leakage protection characteristics

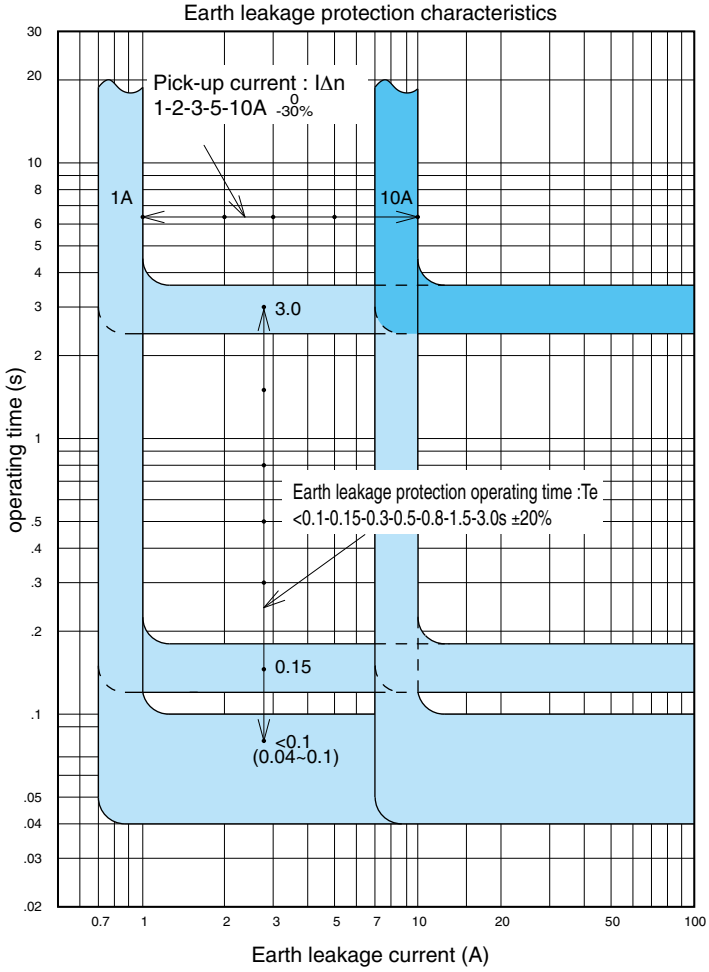

Accessories

2nd Additional Pre-alarm (AP)

Option

The Pre-Alarm (1st) function is already installed in standard breaker, the 2nd additional Pre-Alarm function can be installed as option, thereby it is possible to monitor (observer) electric circuit in more detail by 2nd additional Pre-Alarm function.

Setting item	Mark	Adjustable setting range	Accuracy	Factory default value
2nd Additional Pre-alarm pick-up current	Ip2	0.5-0.6-0.7-0.8-0.84-0.88-0.92-0.96-1.0 x Iu WS	±10% WS	1.0
		0.5-0.6-0.7-0.8-0.84-0.88-0.92-0.96-1.0 x IL WM	±5% WM	
2nd Additional Pre-alarm time	Tp2	0.9-0.8-0.7-0.6-0.5-0.4-0.3 x TL (x TL) - 5-10-15-20-30-40-60s (FLAT)	±20%	0.9 (x TL)

<Pre-alarm timing chart>

PAL LED starts to blink at time when the actual current exceeds the setting current. Then after it passes a half of LTD time (TL), it starts to light and simultaneously the contact output starts. As for its operating time, refer to the Operating characteristic curves in Page 24, 26, 28 and 30.

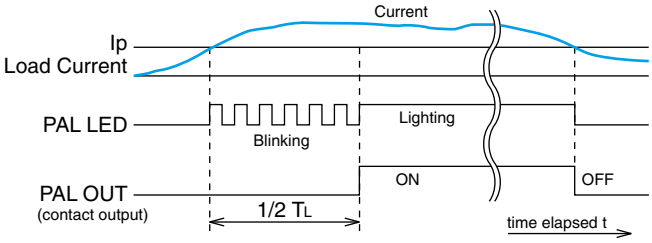

Neutral pole 50% protection (N5)

Option

When used OA equipment or DC power source that brings the third higher harmonic in 3 phases 4 wires circuit, is sometimes it electrically damages the other peripheral equipments due to the superposition of the third higher harmonic on Neutral pole.
This Neutral Pole 50% Protection (N5) is useful to protect the other peripheral equipments from such an electrical damage and also to prevent some troubles with the Pre-Alarm function (AP).
Neutral pole overcurrent protection (operating at 100% of rated current) is already equipped with ETR as standard features.
But, if the operation at 50% of rated current is required on Neutral pole, it becomes available with this optional module unit.

MCR switch (MCR-SW)

Option

With this MCR switch, at the time of breaker closing from OFF to ON the INST (Instantaneous) characteristic works, and then after breaker is in closed (ON) position the INST characteristic becomes ineffective. This controlling function of INST characteristic is useful for the protection on the short-circuit fault at the time of closing and also for expanding the selective combination with branch breakers after closed.
The factory default setting of "INST/MCR pick-up current setting dial" is usually at "INST", so if the function of this MCR switch is required, the dial should be changed to "MCR".

Temperature alarm (TAL)

Option

When TAL sensor is installed in the breaker, temperature alarm is operative. When the temperature of main contact exceeds normal level, temperature alarm is indicated by LED on main setting module and also the output contact is made energize if power supply with output contact is installed. It is possible to know temperature rising which is caused by wear of main contact because TAL sensor is installed near main contact. When the temperature of main contact goes down to the normal level, temperature alarm turns off automatically.

Field test device (Y-2005)

Option

The electronic trip relay can be checked by this field test device when the breaker is at the test position or the disconnect position. The breaker will trip when tested with this device.

Y-2005 specification

Test items	LTD, STD, INST, GFR, PAL
Range of signal output	Voltage signal equivalent to 1%~2500% of Rated current In (CT rating)
Dimensions	220mm(W) x 150mm(H) x 340mm(D)
Time counter	0.000 ~ 999.999s
Input voltage	100-240V AC 50/60Hz
Weight	4.5kg

Additional functions

By adding the extension module unit in ETR, additional functions like measuring, display and communication become available.

List of extension unit (Option)

Name	Type	Description
Extension module	EX1	Base module for display and interface function (indispensable)
Display module (relay attachment)	DP1	Display module for ETR
Display module (panel attachment)	DP2	Display module for panel board
VT unit	VT	Module for measuring voltage, active power and active energy
CC-Link interface unit	BIF-CC	Interface unit for CC-Link
PROFIBUS-DP interface unit	BIF-PR	Interface unit for PROFIBUS-DP
MODBUS (RS-485) interface unit	BIF-MD	Interface unit for MODBUS (RS-485)
I/O unit	BIF-CON	Module for breaker remote control (Interface unit is required)
Drawout position switch	BIF-CL	Switch for detecting the drawout position of the breaker (Interface unit and I/O unit are required.)

Note: The above extension units are not available for WS relay with DP3.

Selection samples of additional function modules

(○:required optional modules)

Additional function \ Name / Type			Extension module	Display	VT unit	Interface unit		
			EX1	DP1 or/and DP2	VT	BIF-CC	BIF-PR	BIF-MD
Load current	Display		○	○				
	Communication	CC-Link	○			○		
		PROFIBUS-DP	○				○	
		MODBUS	○					○
	Display & Communication	CC-Link	○	○		○		
		PROFIBUS-DP	○	○			○	
		MODBUS	○	○				○
Voltage Power Energy Harmonics current etc.	Display		○	○	○			
	Communication	CC-Link	○		○	○		
		PROFIBUS-DP	○		○		○	
		MODBUS	○		○			○
	Display & Communication	CC-Link	○	○	○	○		
		PROFIBUS-DP	○	○	○		○	
		MODBUS	○	○	○			○

DP1 EX1(inside breaker)

DP2 (on the Panel)

VT unit (placed separately)

BIF-CC

BIF-PR

BIF-MD

Interface unit (placed separately)

Electronic trip relay (ETR) Type designation breakdown

□□□-□

Additional function

- □ Extension module(EX1)
  - □ Display(DP1)
  - □ Display onto panel board(DP2)
  - □ VT unit(VT)
  - **Network**
    - □ BIF-CC
    - □ BIF-PR
    - □ BIF-MD

● Main setting module

WS1, WB1, WM1, WF1	AE630–1600-SW, AE2000–3200-SW, AE4000-SW
WS2, WB2, WM2, WF2	AE2000-SWA, AE4000-SWA, AE5000-SW
WS3, WB3, WM3, WF3	AE6300-SW

WS : General use
WM : Generator protection use
WB : INST only
WF : Protective coordination use

● Optional setting module

G1: Ground fault protection
N5: Neutral pole 50% protection
E1: Earth leakage protection
AP: 2nd Additional Pre-alarm
NA: Without optional setting

● ETR Auxiliary Equipment

□ Temperature alarm(TAL)
□ MCR switch(MCR-SW)
□ Neutral CT(NCT)
□ External ZCT

● Power supply

P1: 100-240V AC•DC
P2: 24-60V DC
P3: 100-240V AC / 100-125V DC with output contact
P4: 24-60V DC with output contact
P5: 100-240V DC with output contact (SSR)

Wire system (when EX1 is specified)

EX1
- □ 3ϕ3W
- □ 3ϕ4W
- □ Normal connection
- □ Reverse connection

Extension module (EX1)

Option

This is the base module that provides various additional functions when combined with Display module (DP1 / DP2), Interface unit (BIF-CC / BIF-PR / BIF-MD) and VT unit (VT).

1 Various measuring elements, high measuring accuracy

By adopting high-performance ASIC, various measuring elememts (load current, voltage, energy, harmonics, etc.) and high measuring accuracy are attained. Refer to page 40 for more details.

2 Communication function

With the advanced internal communication function of this EX1 module, it is achieved rapid transmission of data between ETR and Displays or Interface units. Besides, it can be extended the function by connecting with Max. 2 display modules and 1 interface unit in parallel.

Display module (DP1/DP2)

Option

This is the module for display and setting of the various information like measured value, trip and alarm status, ETR status for display and output contacts setting etc...

1 Multi display of measuring element

It enables to easily monitor the comparison of each measuring element with its multi display (4 phases multi display of load current and voltage) on one screen.

2 Two-color back light

Under trip or alarm, back light color changes from green to red automatically, which visually shows an abnormal situation.

3 Graphical display

By adopting dot matrix type LCD, graphical display such as bar graph display of load current, harmonic currents and characteristic curve are available.

There are 2 types of display module. One is the ETR attachment type (DP1). The other is the panel attachment type (DP2), which can be connected to extension terminals of control circuit with 2m cable. 2 units of display modules (DP1 and DP2) can be attached on one breaker. (As for outline dimensions of DP2, refer to page 57.)

Note;

- Extension module (EX1) is required.
- VT unit (VT) is required to display the measured data except load current.

VT unit (VT)

Option

VT unit enables to measure voltages, powers, energies, harmonic currents and etc. by connecting the ETR with Extension module (EX1).
(outline dimensions are shown in page 58.)

Note;

- The length of the cable attached for VT unit is 2m.

Network

Interface unit (BIF-CC/BIF-PR/BIF-MD)

Option

BIF-CC (CC-Link)

BIF-PR (PROFIBUS-DP)

BIF-MD (MODBUS(RS-485))

These Interface units can expand the future possibility in various communication and Intelligent control.

1 Applicable to various open networks.

These units are applicable to various open network systems such as CC-Link, PROFIBUS-DP and MODBUS (RS-485), which can be built in easily.

2 Intelligent control by Multi-data communication

It can be the Intelligent control by Multi-data communication from PLC/SCADA to these interface units. These interface units receive the measurement information, setting values, error information and trip and alarm information from PLC/SCADA.

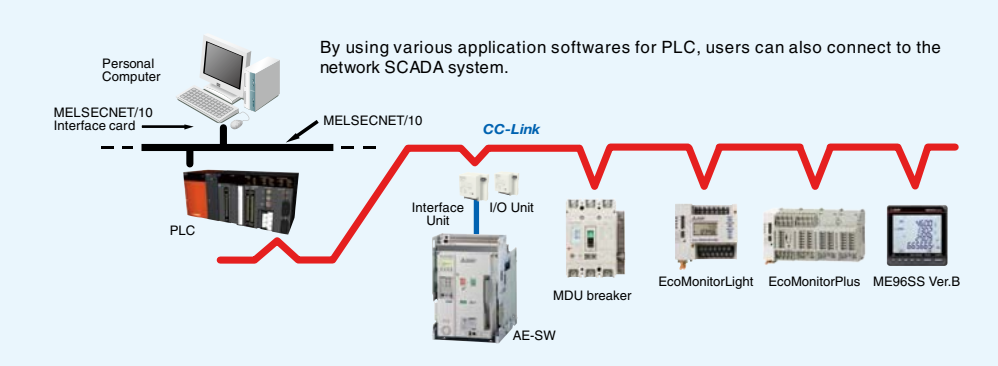

The length of the cable for interface unit is 2m.

Note: In the case of CC-Link.

Note:

- Extension module (EX1) is required.
- VT unit (VT) is required to transmit the measured data except load current.

I/O unit (BIF-CON)

Option

BIF-CON

The Input & Output Controlling Unit (BIF-CON) is available for the remote controlling and the remote monitoring of the breaker condition through the various network systems.
With this BIF-CON unit in addition to the Interface Unit, it becomes possible to control the breaker remotely, like a ON or OFF operations or Spring-charging.

Function	Description	Note
Control	Breaker ON operation	1a contact for Closing coil (CC)
	Breaker OFF operation	1a contact for Shunt trip device (SHT) (not applicable for 380-500V AC rating)
	Spring charge	1a contact for Motor charging (MD)
Monitor	Digital Input (DI) monitoring	For BIF-CC and BIF-MD, Max. 3 contacts monitoring are available. For BIF-PR, 1 contact monitoring is available.

Drawout position switch (BIF-CL)

Option

BIF-CL

With this Drawout position switch (BIF-CL) in addition to Interface unit and I/O unit (BIF-CON), the remote monitoring of draw-out position becomes available for the breaker draw-out type.

Function	Description	Note
Monitor	Breaker Drawout position	Position : Connect or Test or Disconnect

Chart of additional functions

○ : can be displayed by DP1/DP2/DP3　　● : can be displayed and set by DP1/DP2

Combination sample													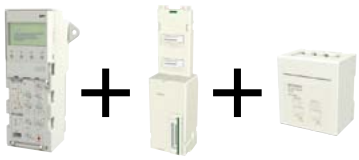																	
Type	① ② - ③ ;EX1;DP1(;DP2) Note 1)												① ② - ③ ;EX1;DP1(;DP2),VT Note 1)												① ② - ③ ;DP3					
①Main setting	WS / WF				WM				WB				WS / WF				WM				WB				WS					
②Optional setting	NA	AP	G1	E1	NA	AP	G1	E1	NA	AP	G1	E1	NA	AP	G1	E1	NA	AP	G1	E1	NA	AP	G1	E1	NA		G1			
③Power supply	P1~P5												P1~P5												P1~P5					
Measurement																														
Load current (Accuracy)	○ (±2.5%)												○ (±2.5%)												○ (±1.5%) Note 5)					
Leakage current (±15%) Note 4)	-	-	-	○	-	-	-	○	-	-	-	○	-	-	-	○	-	-	-	○	-	-	-	○	-					
Voltage (±2.5%)	-												○												-					
Power (active,reactive,apparent) (±2.5%)	-												○												-					
Power factor (±5%)	-												○												-					
Energy (active,reactive) (±2.5%)	-												○												-					
Harmonics current (Accuracy)	-												○ (±2.5%, 3.5...19th)												○ (±3.5%, 3,5,7th) Note 5)					
Frequency (±2.5%)	-												○												-					
Trip history																														
LTD	○				○				-				○				○				-				○					
STD	○				○				-				○				○				-				○					
INST	○												○												○					
GFR	-	-	○	-	-	-	○	-	-	-	○	-	-	-	○	-	-	-	○	-	-	-	○	-	-		○			
ER	-	-	-	○	-	-	-	○	-	-	-	○	-	-	-	○	-	-	-	○	-	-	-	○	-					
UVT	○ Note 2)												○ Note 2)												-					
Alarm history																														
PAL1	○												○												○					
PAL2	-	○	-	-	-	○	-	-	-	○	-	-	-	○	-	-	-	○	-	-	-	○	-	-	-					
OVER	○												○												○					
GFR	-	-	○	-	-	-	○	-	-	-	○	-	-	-	○	-	-	-	○	-	-	-	○	-	-		○			
EPAL	-	-	-	○	-	-	-	○	-	-	-	○	-	-	-	○	-	-	-	○	-	-	-	○	-					
ER	-	-	-	○	-	-	-	○	-	-	-	○	-	-	-	○	-	-	-	○	-	-	-	○	-					
TAL	○ Note 3)												○ Note 3)												-					
Characteristic setting (panel attachment product [DP2] only)																														
LTD	○				○				-				○				○				-				-					
STD	○				○				-				○				○				-				-					
INST	○												○												-					
PAL1	○												○												-					
PAL2	-	○	-	-	-	○	-	-	-	○	-	-	-	○	-	-	-	○	-	-	-	○	-	-	-					
GFR	-	-	○	-	-	-	○	-	-	-	○	-	-	-	○	-	-	-	○	-	-	-	○	-	-		-			
EPAL	-	-	-	●	-	-	-	●	-	-	-	●	-	-	-	●	-	-	-	●	-	-	-	●	-					
ER	-	-	-	○	-	-	-	○	-	-	-	○	-	-	-	○	-	-	-	○	-	-	-	○	-					
Setting																														
Contact outputs setting change	●												●												-					
Date & Time	●												●												-					
Demand time	●												●												-					
Alarm holding method	●												●												-					
Reset																														
Trip and alarm information	●												●												-					
Measurement information (min. and max. values)	●												●												-					
ETR information																														
Main / Optional setting module information	○												○												-					
Error information	○												○												-					
CT rating (In)	○												○												-					
Phase line method	○												○												-					
Normal connection or reverse connection	○												○												-					
Transmission																														
Communication Note 6)	CC-Link PROFIBUS-DP MODBUS												CC-Link PROFIBUS-DP MODBUS												-					

Note 1) 2 units of display modules can be attached.
Note 2) Display is available only when UVT module is attached.
Note 3) Display is available only when TAL sensor is attached.
Note 4) Include the accuracy of ZCT.
Note 5) This is the accuracy value when WS relay with DP3 is assembled to ACB before factory shipment.
Note 6) Interface unit is required for communication function.

Electronic trip relay circuit diagram

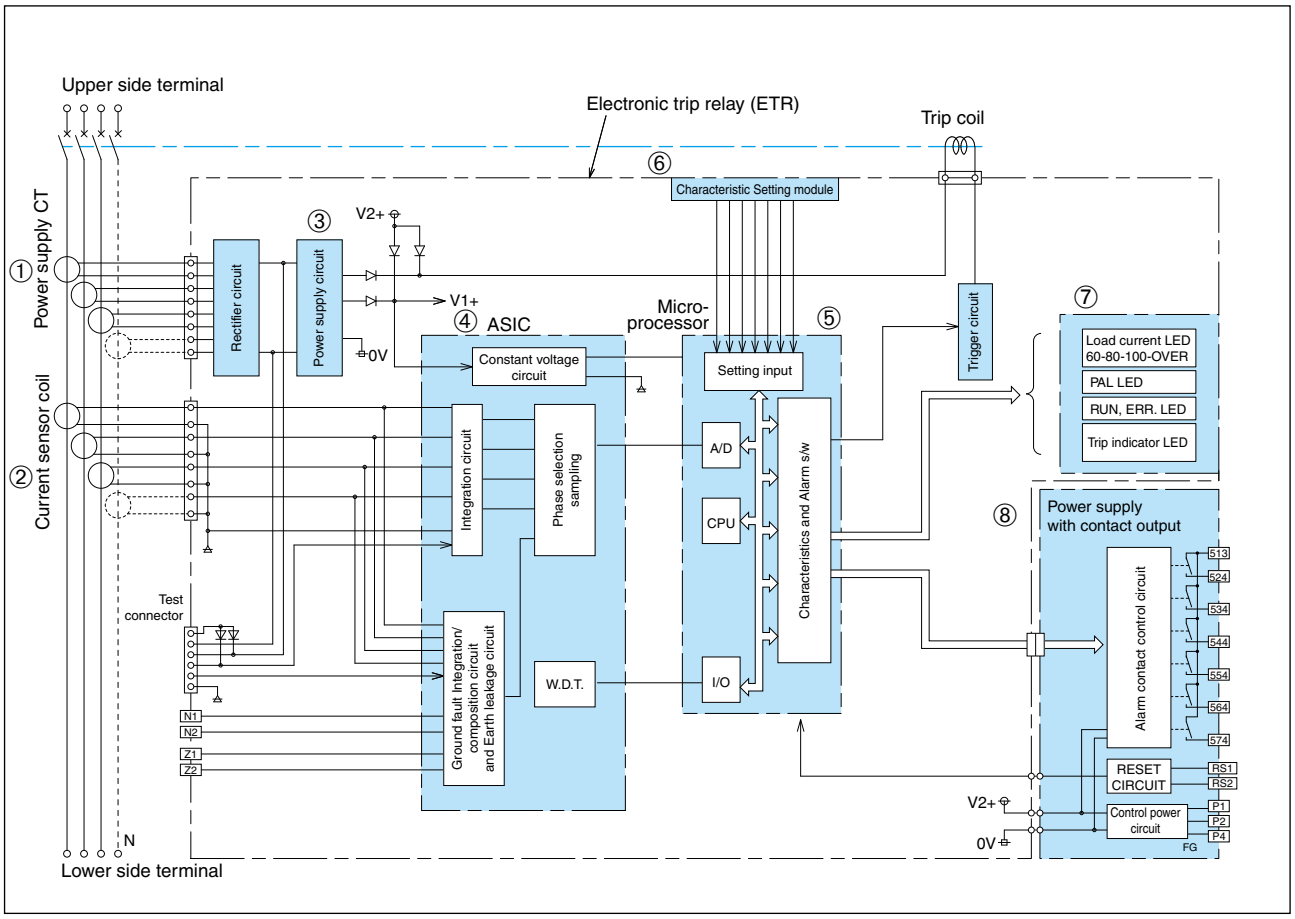

① **Power supply CT**
Energy is supplied for the operation of the overcurrent tripping and ground fault tripping(GFR) function of the electronic trip relay.

② **Current sensor coil**
The current in each phase flowing through the breaker is detected. An air core coil which has good linearity is adopted.

③ **Power supply circuit**
This part converts power supply CT energy to constant voltage for respective circuits in the ETR.

④ **ASIC**
This ASIC ampplifies the signal detected by the current sensor coil and the detected signal of ground fault current which is vector composed of the detected signals of each phase.

⑤ **Microprocessor**
The microprocessor integrates each phase current waveform from the ASIC and performs processing for overcurrent protection and others.

⑥ **Characteristic setting module**
The module for the characteristic setting of the ETR.

⑦ **Several LEDs**
The load current LED gives a figure of current in percent by CT energy.
Trip indicator and pre-alarm are indicated by control power supply.
RUN and ERR. LED indicate breaker's condition by control power supply or ten-odd percent of CT energy.

⑧ **Power supply with contact output**
This outputs contact signals of fault cause (including pre-alarm) and an other alarms.
A control supply is necessary for this function.

Setting procedure

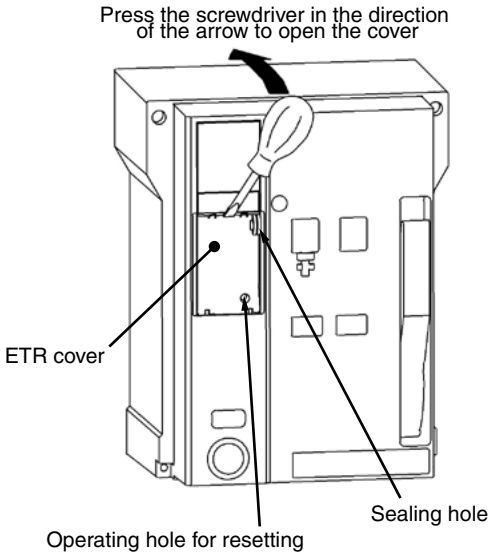

1 Prepare a small flat tipped screwdriver.

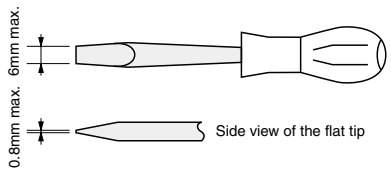

2 Insert the flat tipped screwdriver into the opening of the ETR cover. Then, lightly turn the screwdriver to the upside as shown in the left figure, and the ETR cover will open.

3 There are two kinds of switches for characteristics setting and for trip indicator reset. They should be used as follows.

① Adjustable in steps

Rotary code switch is used. Do not set the switch at points between steps. The setting value is the same when the switch is positioned at the thick line. (Set the switch with a torque of 0.02N•m or below.)
Note) If the switch is set at points between steps, the characteristics setting value will be decided at either end of steps.

② Push-button

This is for temporary operation, and press it with force of 3N or less.

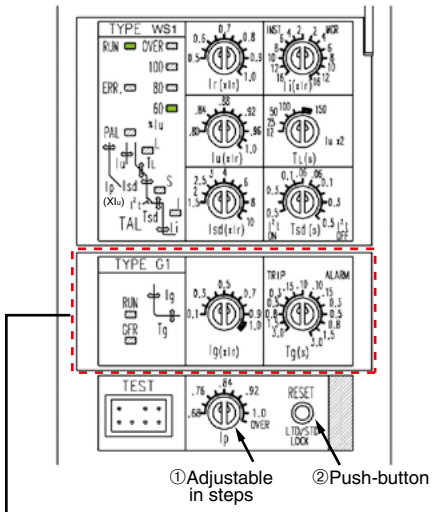

4 For WS relay with DP3, there is a slide type switch (Frequency selector switch) as the left side picture shows.

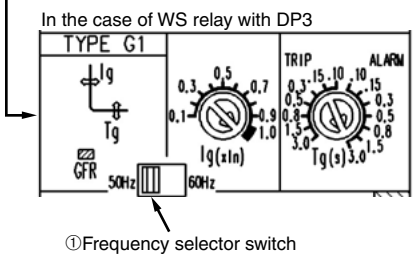

① Frequency selector switch

Do not set the switch at points between the slide.
When operating the switch, use a flat tipped screwdriver of the following size.

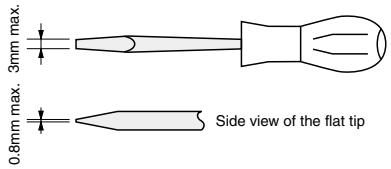

5 When the characteristic is set up, use a device like a field tester, etc to make sure that the required characteristic has been set.

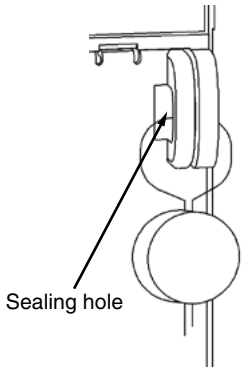

6 At sealing, seal the ETR cover by using the sealing hole at the top of the ETR cover.

Wiring diagram

● The following diagram shows the case that accessories are fully equipped.

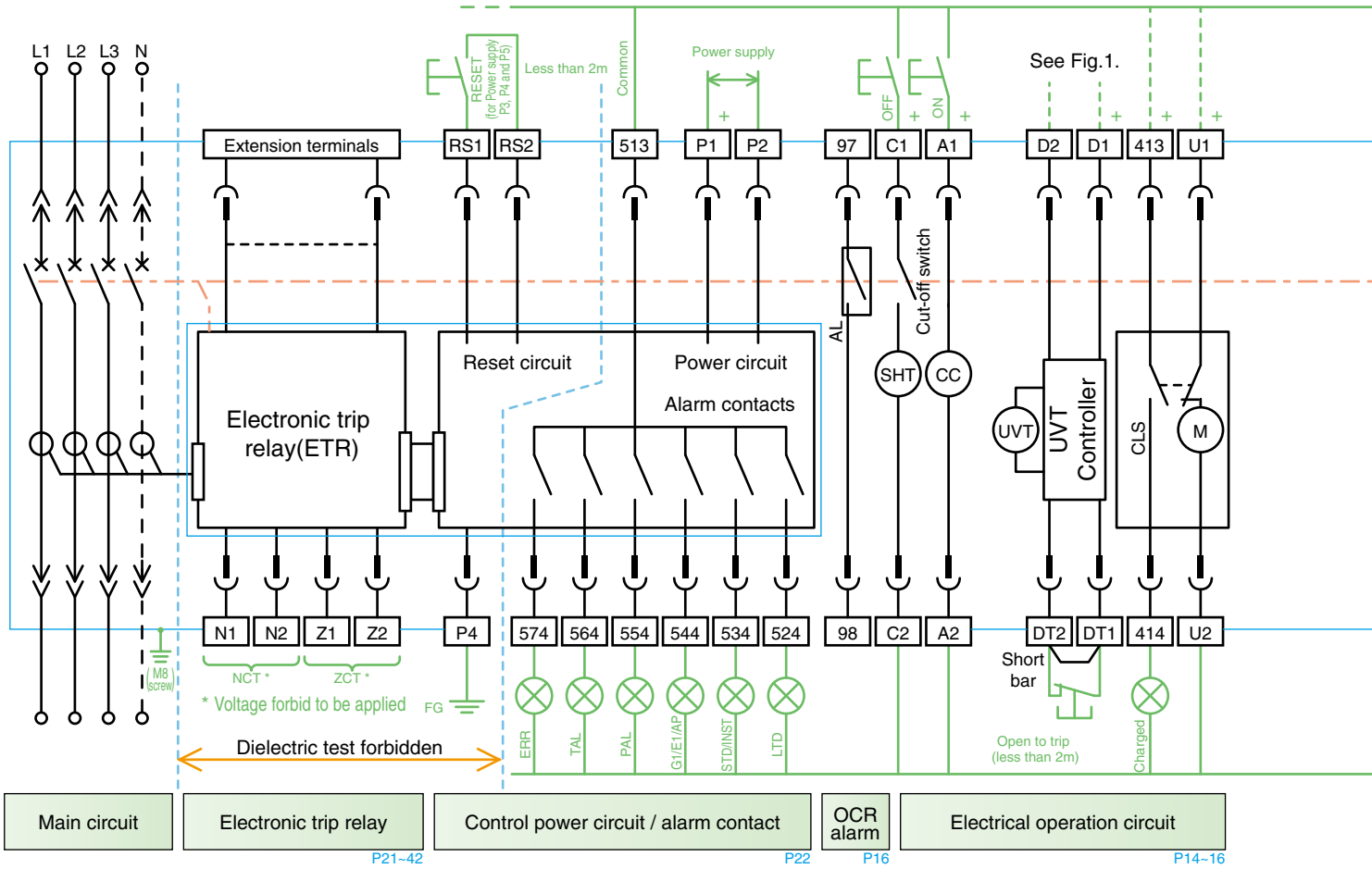

Terminal description

13 14 ~ 53 54	Auxiliary switch "a"
11 12 ~ 51 52	Auxiliary switch "b"
U1 U2	Motor charging
413 414	Charged signal (Normal open)
D1 D2	Voltage Input terminal of UVT
DT1 DT2	Trip terminal of UVT (Remote trip)
A1 A2	Closing coil
C1 C2	Shunt trip
97 98	OCR alarm
P1 P2	Power supply for ETR
P4	FG of power supply (FG:Frame Ground)
RS1 RS2	Alarm reset (Trip cause LED, alarm contact)
513 524	Alarm contact for LTD Trip
513 534	Alarm contact for STD or INST Trips
513 544	Alarm contact for Ground fault, Earth leakage trips or 2nd Pre-alarm contact
513 554	Pre-alarm contact
513 564	Temperature alarm contact
513 574	Error alarm contact
Z1 Z2	For external ZCT
N1 N2	For Neutral CT (Note)
Extension terminals	For external display DP2
	For Interface unit
	For VT unit

Accessory Symbols

SHT	Shunt tripping device
CC	Closing coil
M	Motor(Motor charging device)
UVT	UVT coil
AX	Auxiliary switch
AL	OCR alarm switch
CLS	Charge limit switch
SBC	Shorting b-contact
CL	Cell switch

Internal wiring

External wiring (user's wiring)

Control circuit connecter (drawout type)

Control circuit terminal block Terminal placement

VT (VT unit)	N1	Z1	RS1	513	564	544	524	P1	97	C1	A1	DT1	D1	413	U1	51	41	31	21	11	53	43	33	23	13
I/F-1, I/F-2 (Display Interface unit)	N2	Z2	RS2	P4	574	554	534	P2	98	C2	A2	DT2	D2	414	U2	52	42	32	22	12	54	44	34	24	14

Extended terminal

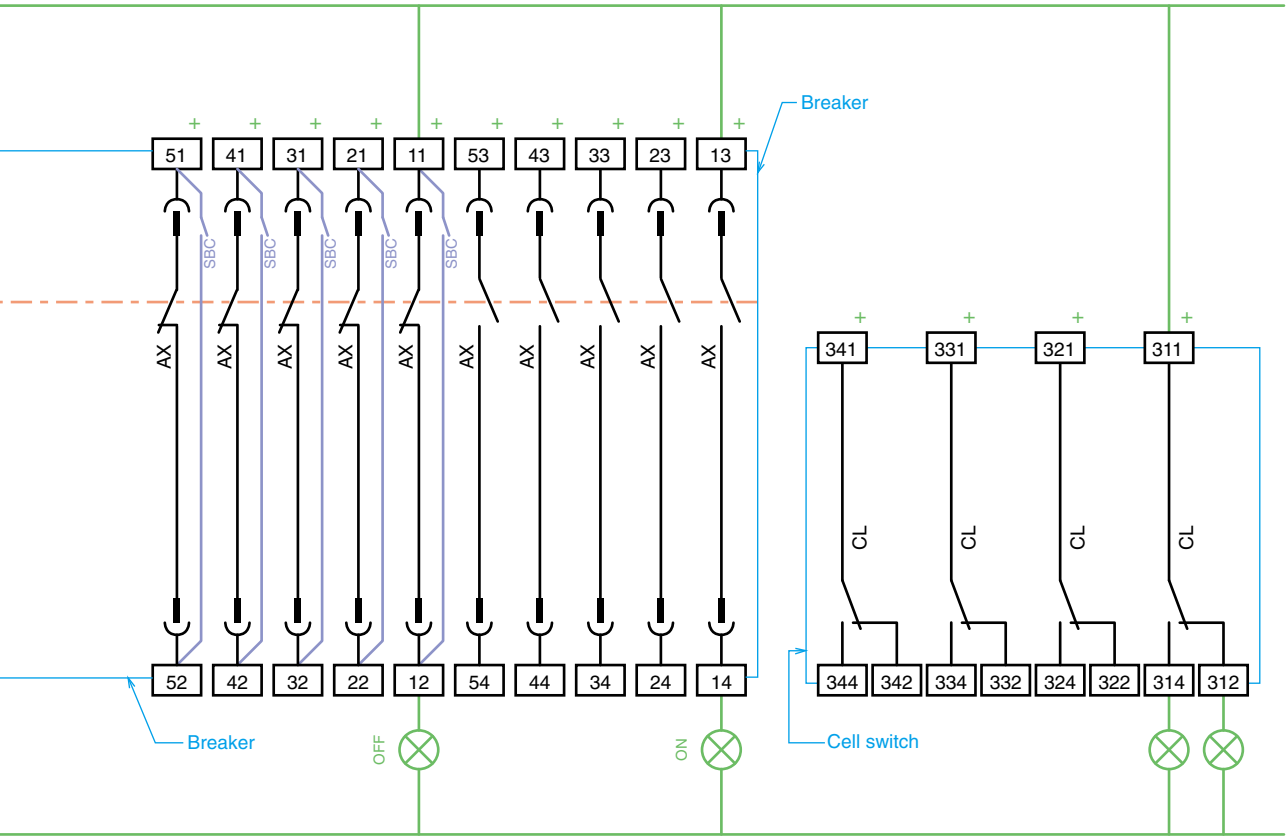

Auxiliary switch(normal close)	Auxiliary switch(normal open)	Cell switch
P16	P16	P19

Fig.1
UVT controller wiring

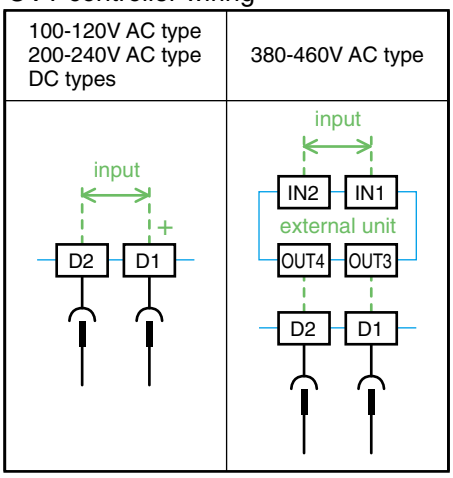

Control circuit Recommended crimp-type terminals

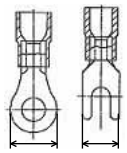

for M3.5 screw
(wire size 1.25mm²~2.0mm²)

Max. 7.2mm

Note;

- For the drawout type, the cables should have the length which allow the control circuit terminal block to be moved to the left or right by 5mm.
- When a coil load is connected in the same control circuit as the ETR, surge absorbers are required to absorb the surge voltage.
- OCR alarm (AL)
  The contact output of the OCR alarm (Standard type AL) is the one-pulse output and the output time is 30~50ms.
  For this reason, this output needs self-holding circuit.
- For Power supply type P3 and P4, the high sensitive relay used in contact output may cause the chattering noise (wrong output of 1ms level) during ON and OFF operation, depending on the Panel placing condition. When it is used in the quick responsive sequence, the filter circuit of a few milli-second (ms) should be provided or the double reading sampling should be implemented.
- Closing coil (CC)
  As CC is one-pulse driven, it is not necessary to insert AXb for burning prevention purposes. Inserting AXb will cause anti-pumping function to be ineffective.
- Under voltage trip device (UVT)
  Use the switch that can open and close 150V DC, 0.5A for remote trip.
  Remote trip terminal has short bar at shipment, so remove it before using this function.
  Disconnect the voltage input wires during dielectric testing of main circuit.
- Since some terminals are polarized, the wiring should be done correctly as the polarity shown in the wiring diagram when the control voltage is DC. Auxiliary switch (AX) Standard type has no polarity.
- Alarm reset (Terminal: RS1 and RS2) is available only for Power supply type P3, P4 and P5.
  For Power supply type P1 and P2, it can not be reset from the Control circuit terminal block (RS1 and RS2).
- Alarm contacts (Terminal : 513 ~ 574) are available only for power supply type P3 , P4 and P5 . For output contacts, refer to page 22 Note2.
- FG (Terminal: P4) is the protective earth for power supply (Terminal: P1 , P2).
  It is recommended to use this terminal to reduce surge (M8 screw required).
- Shorting b-contact (SBC)
  SBC can be provided for all AX b contacts. At the time of shipment from factory, SBC is already connected to control circuit terminal block. Only one more crimp terminal can be added on contact, overlapping with SBC's contact on Terminal: 11 ~ 51 .

Outline dimensions

Drawout type AE630-SW,AE1000-SW, AE1250-SW, AE1600-SW

(mm)

Front view

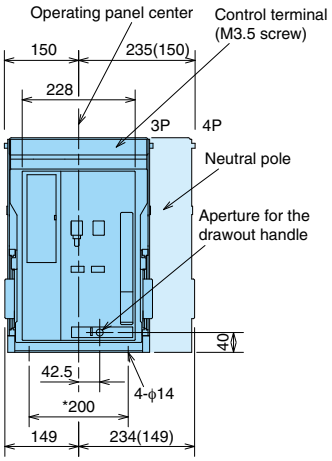

* : Mounting pitch
The numerals shown in parentheses are for 3 poles.

Side view

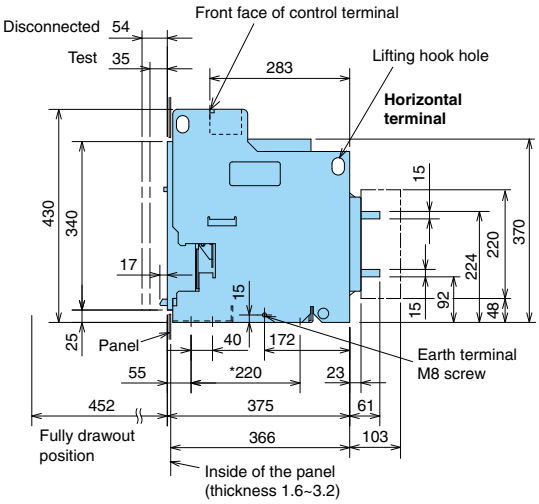

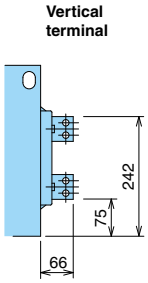

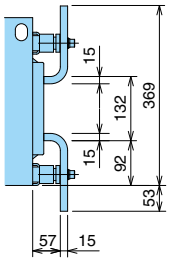

Rear view

Horizontal terminal

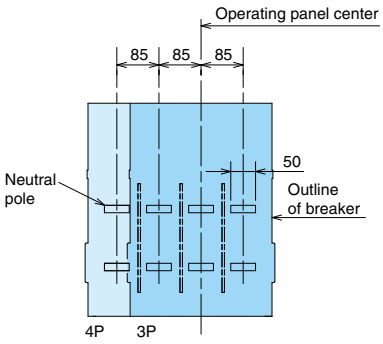

Vertical terminal

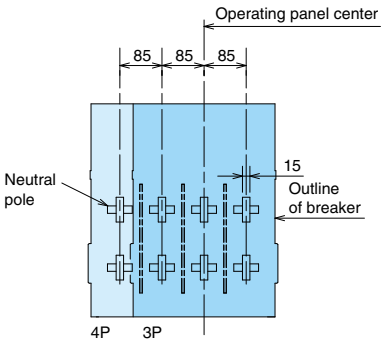

Front terminal

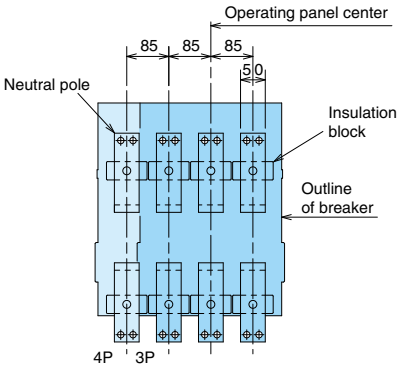

Main circuit terminal dimension

Horizontal terminal
Vertical terminal
Front terminal

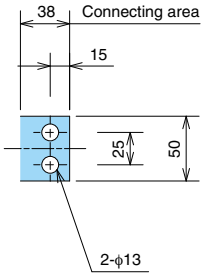

Drawout type AE2000-SWA

(mm)

Front view

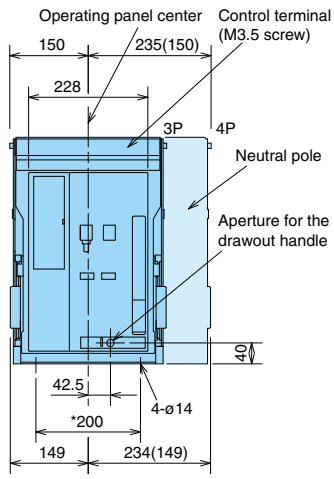

* : Mounting pitch
The numerals shown in parentheses are for 3 poles.

Side view

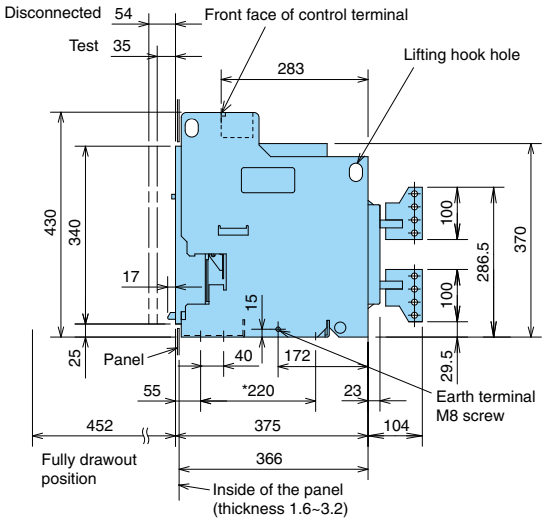

Rear view

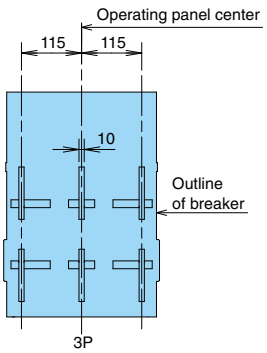

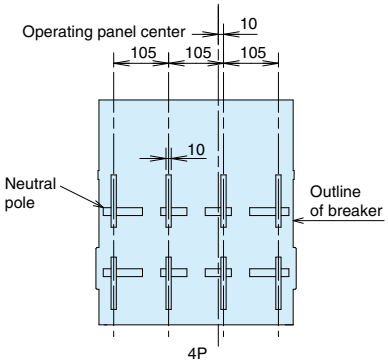

Main circuit terminal dimension

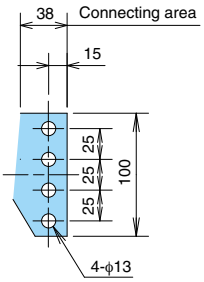

Outline dimensions

Drawout type AE2000-SW, AE2500-SW, AE3200-SW

(mm)

Front view

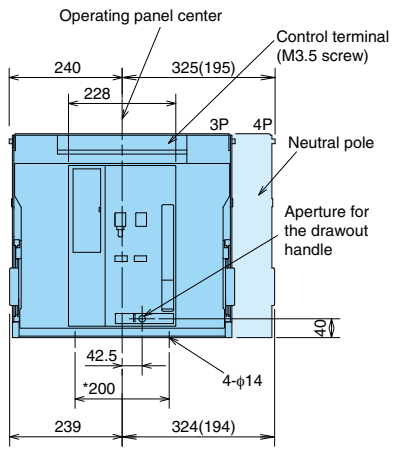

* : Mounting pitch
The numerals shown in parentheses are for 3 poles.

Side view

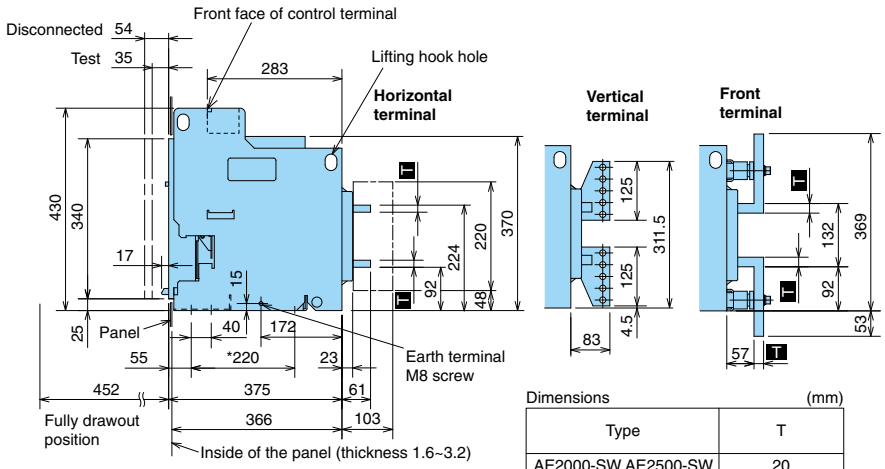

Dimensions (mm)

Type	T
AE2000-SW AE2500-SW	20
AE3200-SW	25

Rear view

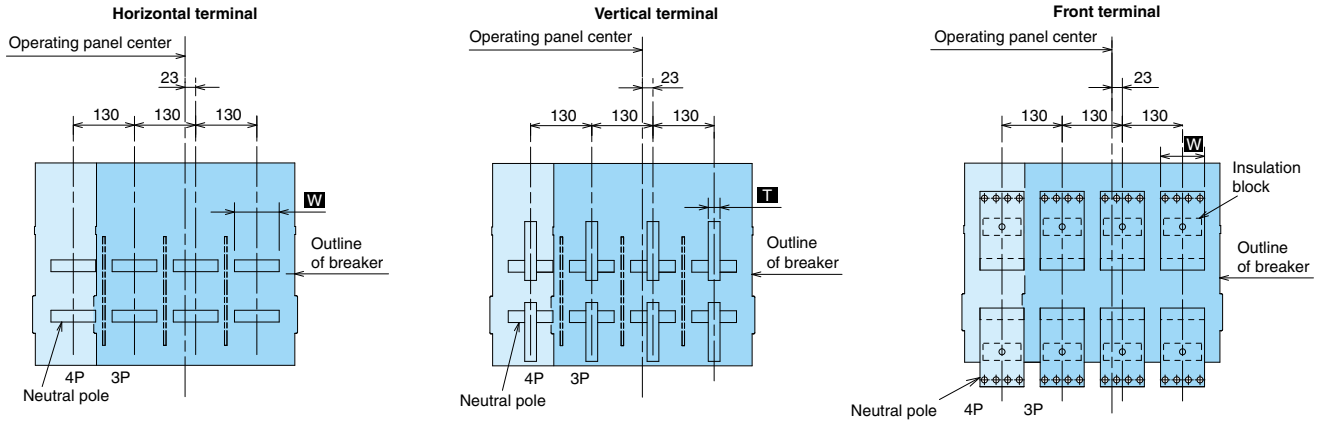

Main circuit terminal dimensions

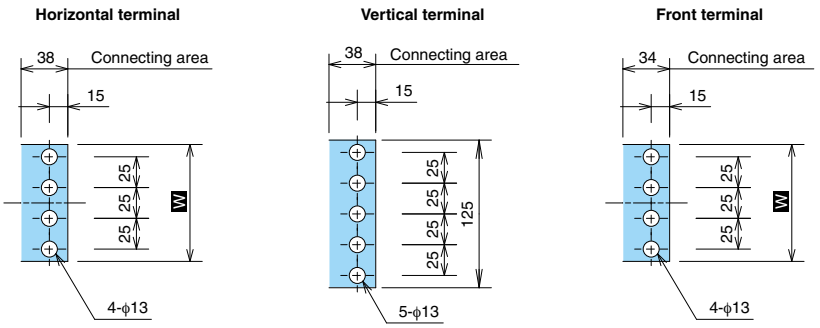

Dimensions (mm)

Type	W
AE2000-SW AE2500-SW	95
AE3200-SW	103

Drawout type AE4000-SWA

(mm)

Front view

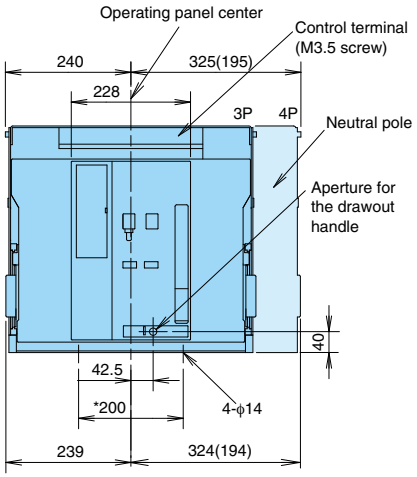

* : Mounting pitch
The numerals shown in parentheses are for 3 poles.

Side view

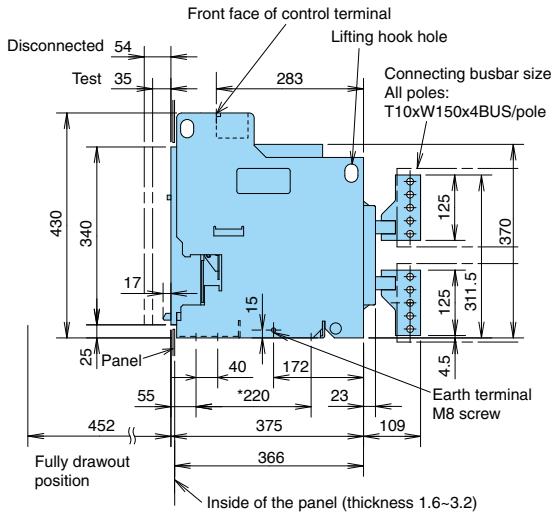

Rear view

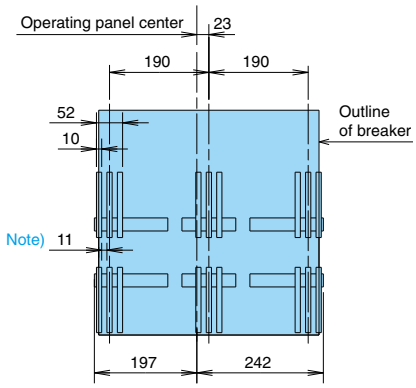

3P

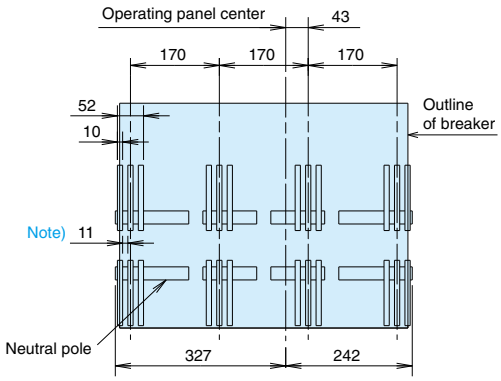

4P

Note) Spacers are not required when fastening connecting conductors (T10). The necessary contact area can be obtained with ACB terminal bent by tightening the screw.

Main circuit terminal dimension

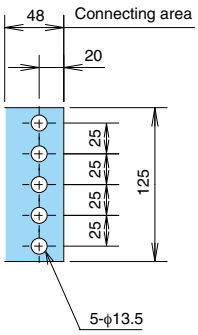

Outline dimensions

Drawout type AE4000-SW, AE5000-SW, AE6300-SW

(mm)

Front view

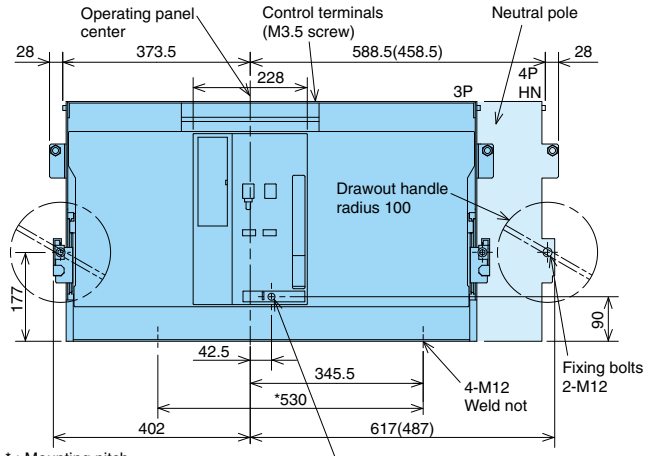

* : Mounting pitch
The numerals shown in parentheses are for 3 poles.

Side view

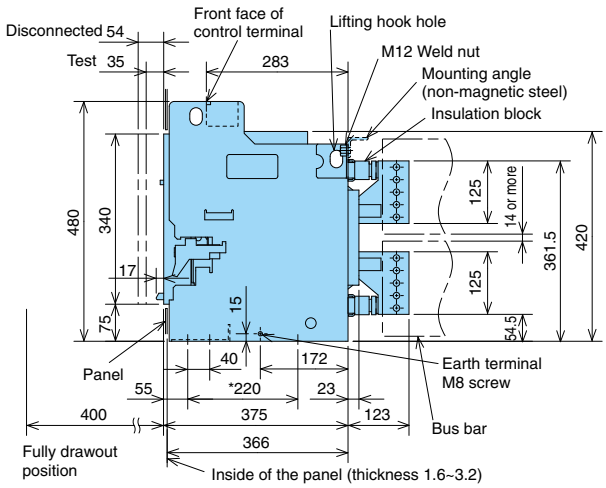

Rear view

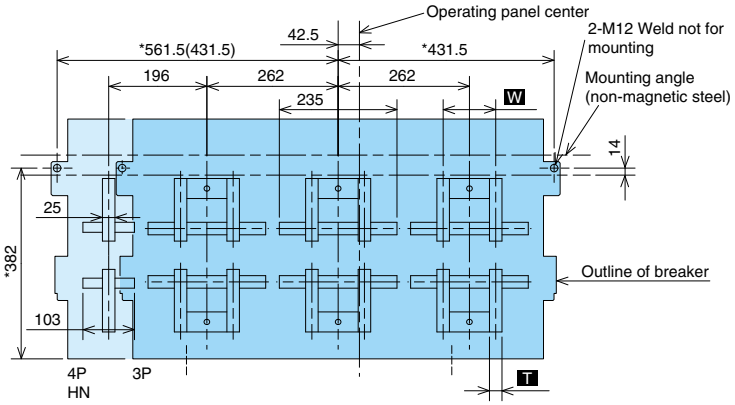

The mounting angle should be prepared by the customer.

Main circuit terminal dimension

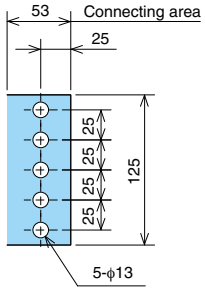

Dimensions (mm)

Type	W	T
AE4000-SW AE5000-SW	100	20
AE6300-SW	105	25

4P FN type

Front view

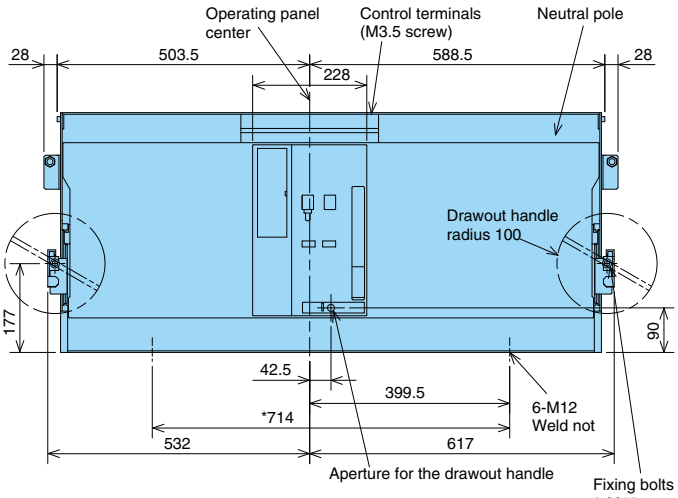

Side view dimensions are the same as 3 pole.

Rear view

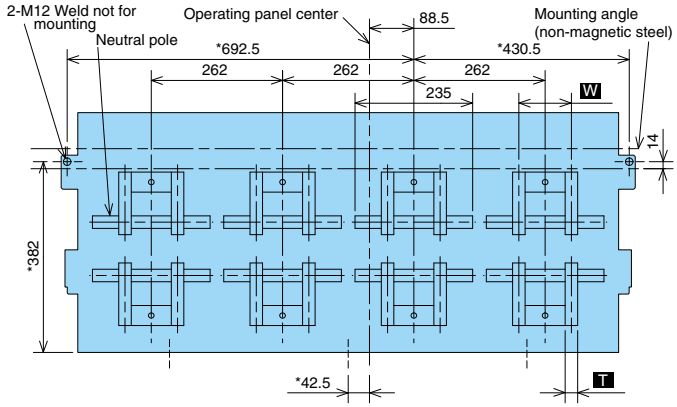

Fixed type AE630-SW, AE1000-SW, AE1250-SW, AE1600-SW

(mm)

Front view

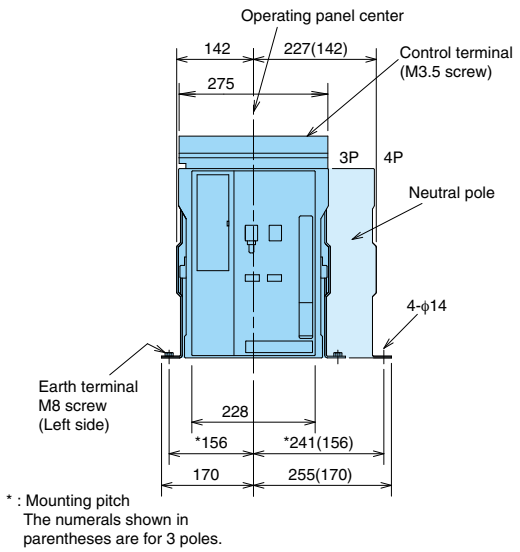

Side view

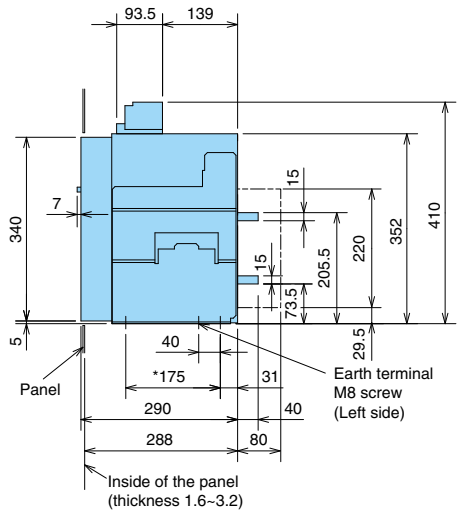

Rear view

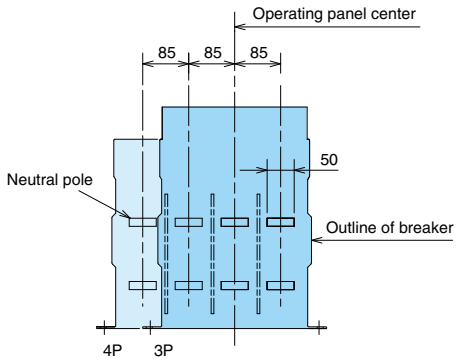

Main circuit terminal dimension

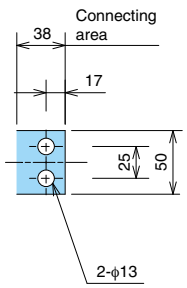

Lifting hooks (HP)

HP is supplied with ACB Fixed type.

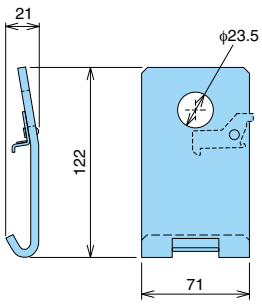

Outline dimensions

Fixed type AE2000-SWA

(mm)

Front view

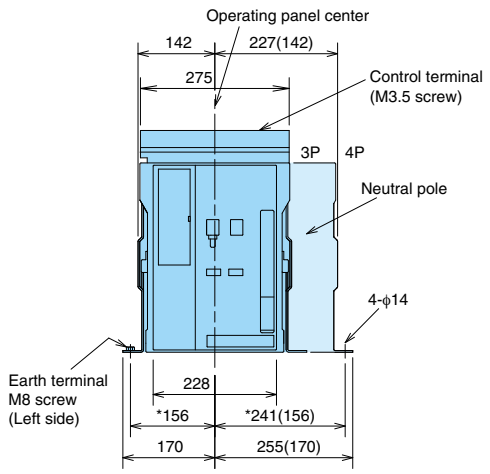

* : Mounting pitch
The numerals shown in parentheses are for 3 poles.

Side view

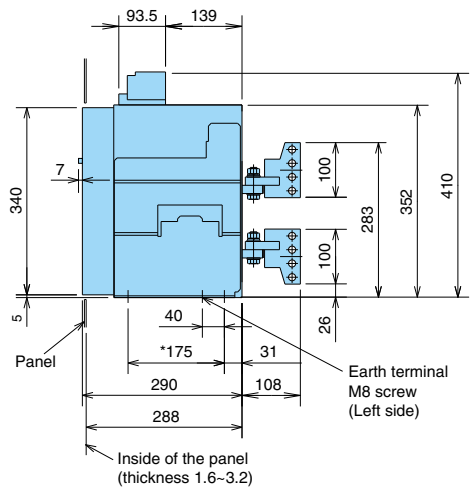

Rear view

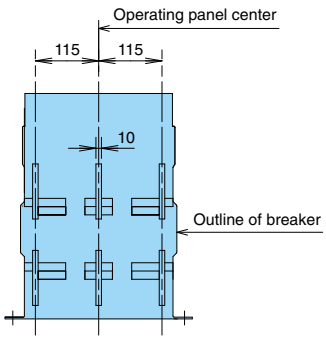

3P

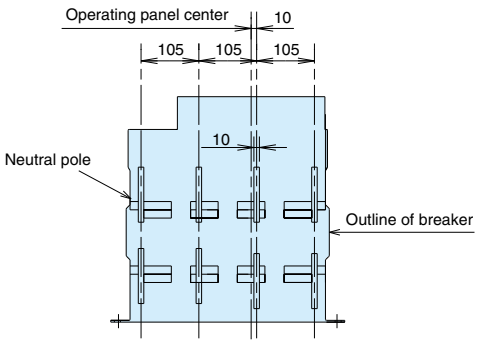

4P

Main circuit terminal dimension

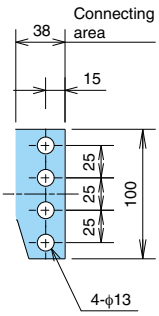

Lifting hooks (HP)

HP is supplied with ACB Fixed type.

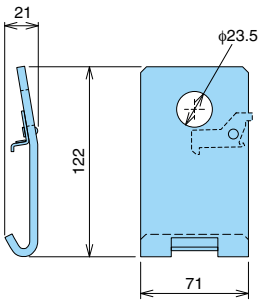

Fixed type AE2000-SW, AE2500-SW, AE3200-SW

(mm)

Front view

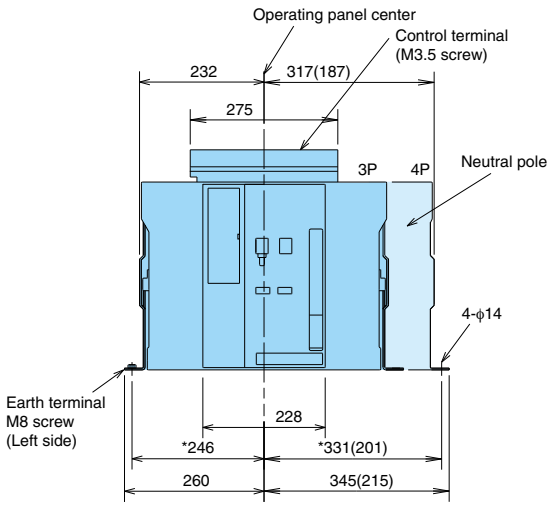

* : Mounting pitch
The numerals shown in parentheses are for 3 poles.

Side view

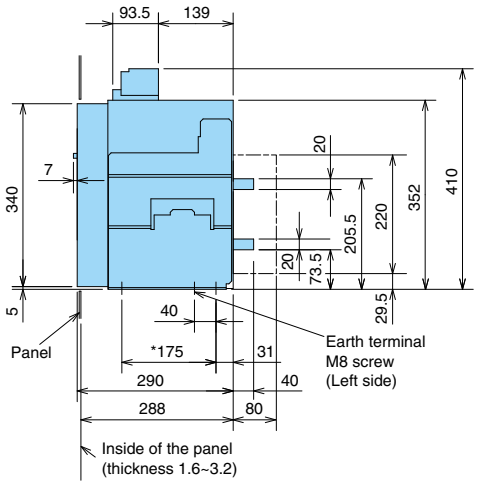

Rear view

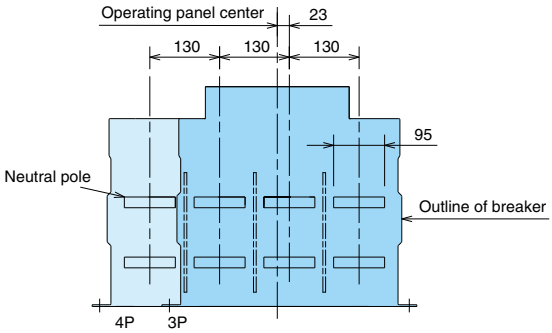

Main circuit terminal dimension

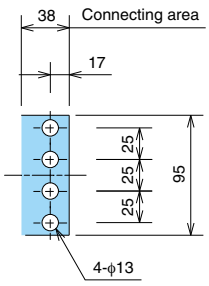

Lifting hooks (HP)

HP is supplied with ACB Fixed type.

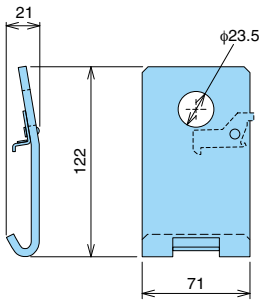

Outline dimensions

Fixed type AE4000-SWA

(mm)

Front view

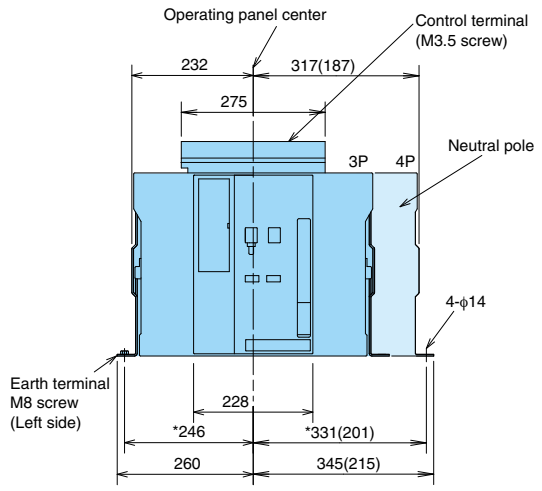

* : Mounting pitch
The numerals shown in parentheses are for 3 poles.

Side view

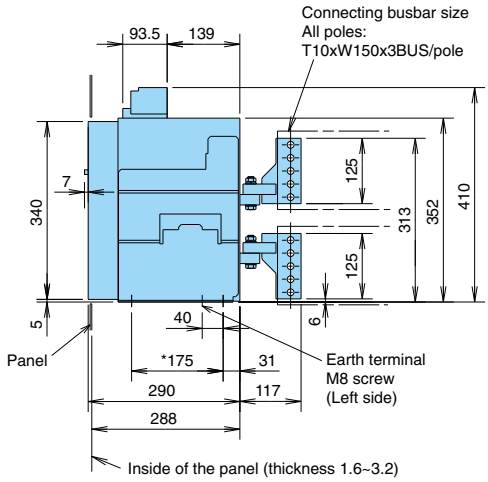

Rear view

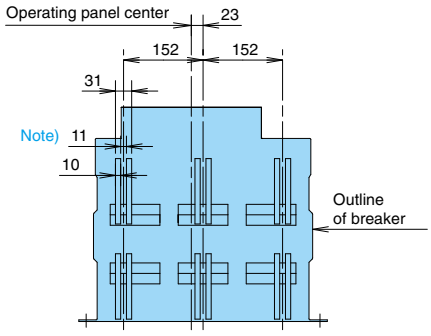

3P

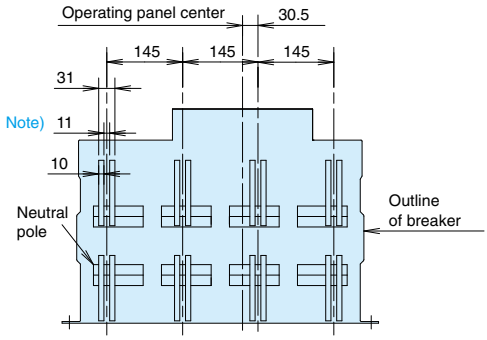

4P

Note) Spacers are not required when fastening connecting conductors (T10). The necessary contact area can be obtained with ACB terminal bent by tightening the screw.

Main circuit terminal dimension

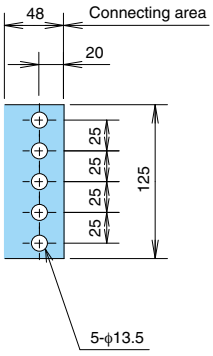

Lifting hooks (HP)

HP is supplied with ACB Fixed type.

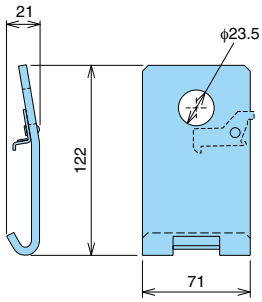

Fixed type AE4000-SW, AE5000-SW, AE6300-SW

(mm)

Front view

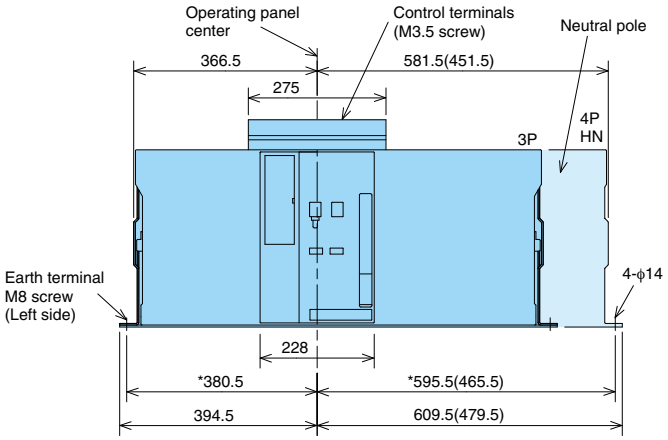

* : Mounting pitch
The numerals shown in parentheses are for 3 poles.

Side view

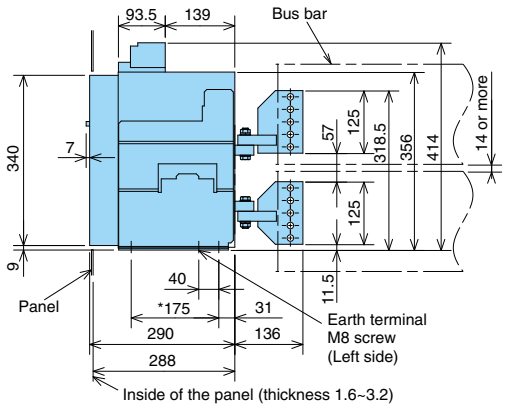

Rear view

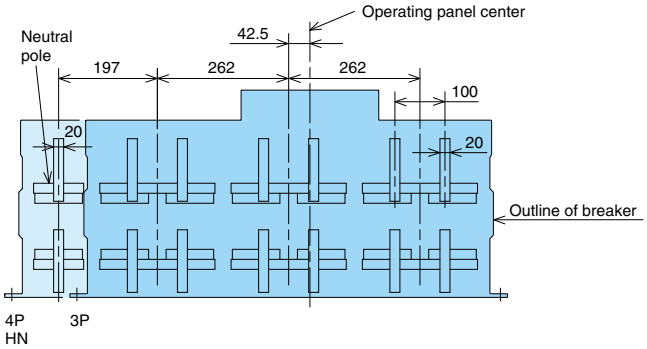

Main circuit terminal dimension

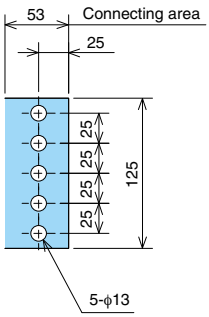

Lifting hooks (HP)

HP is supplied with ACB Fixed type.

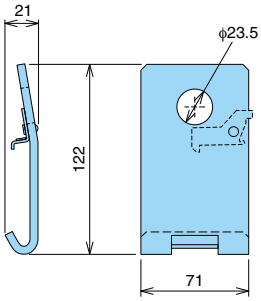

4P FN type

Front view

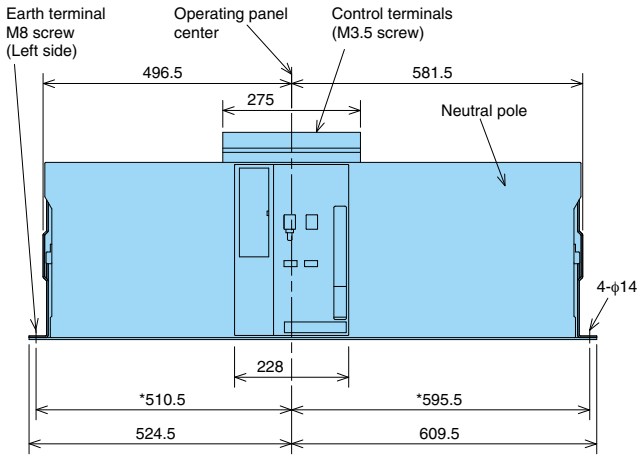

Rear view

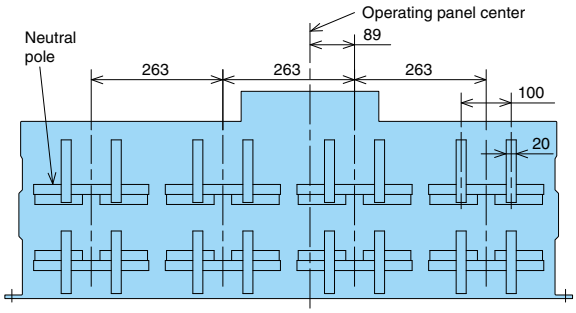

Side view dimensions are the same as 3 pole.

Outline dimensions

Panel cut-out, Terminal adapter, Drawout handle, Terminal cover

Panel cut-out dimensions

Door frame panel cut-out dimensions

Panel cut-out dimensions　　Outline

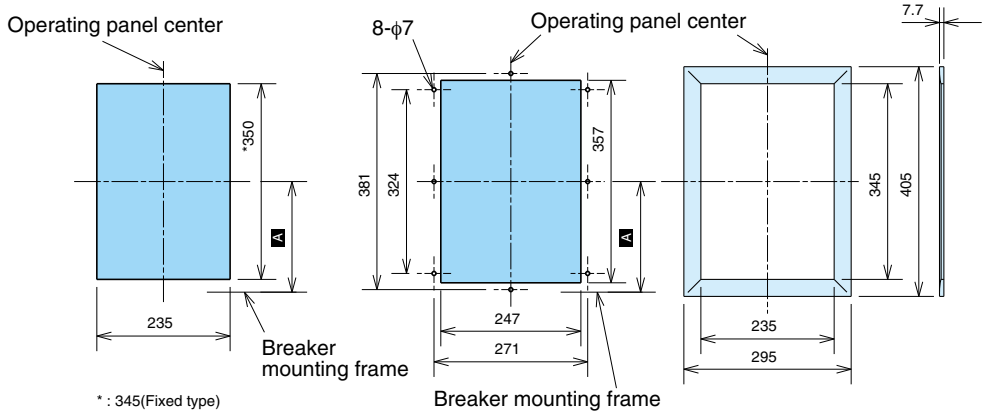

Dimensions (mm)

Type		A
AE630-SW~AE1600-SW	Fixed Type	175
AE2000-SW~AE3200-SW	Drawout Type	195
AE2000-SWA, AE4000-SWA		
AE4000-SW~AE6300-SW	Fixed Type	179
	Drawout Type	245

Vertical terminal adapter

AE630~1600-SW

Top view

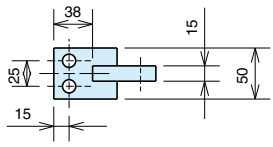

Side view

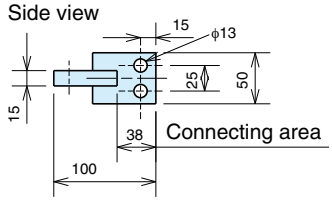

AE2000~3200-SW

Top view

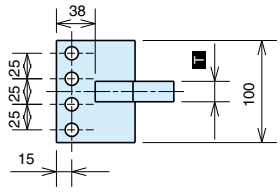

Side view

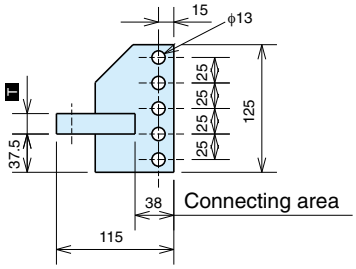

Dimensions (mm)

Type	T
AE2000-SW,2500-SW	20
AE3200-SW	25

Front terminal adapter

AE630~1600-SW　　AE2000~3200-SW

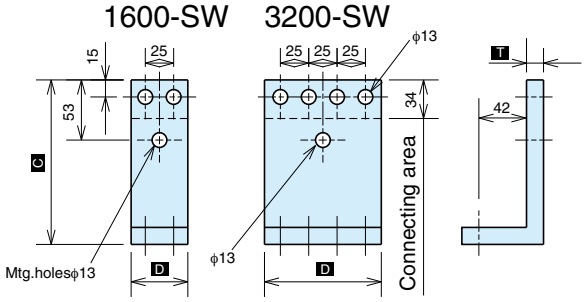

Dimensions (mm)

Type			C	D	T
AE630-SW~1600-SW	Fixed type	Up side	258.5	50	15
		Down side	145	50	15
	Drawout type		145	50	15
AE2000-SW,2500-SW	Fixed type	Up side	258.5	95	20
		Down side	145	95	20
	Drawout type		145	95	20
AE3200-SW	Fixed type	Up side	258.5	95	25
		Down side	145	95	25
	Drawout type		145	103	25

Drawout handle dimensions

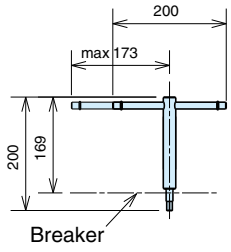

Terminal cover (TTC)

(mm)

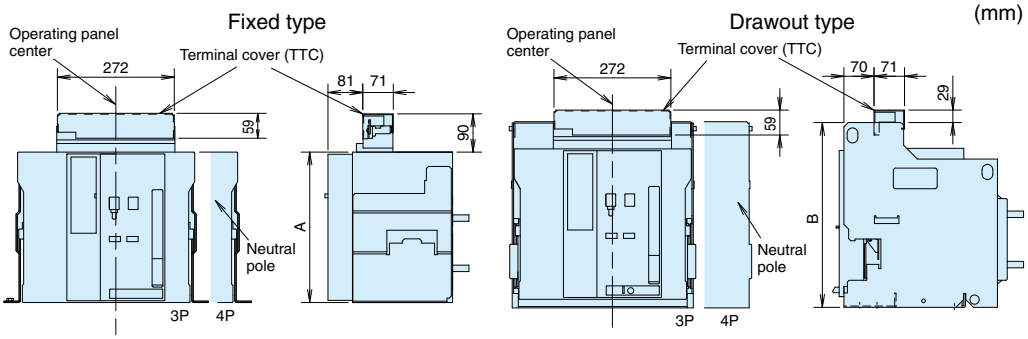

Dimensions (mm)

Type	A	B
AE630-SW~AE3200-SW, AE2000-SWA, AE4000-SWA	350	430
AE4000-SW~AE6300-SW	354	480

Neutral CT (NCT), External ZCT

Neutral CT (NCT)

630~2000A

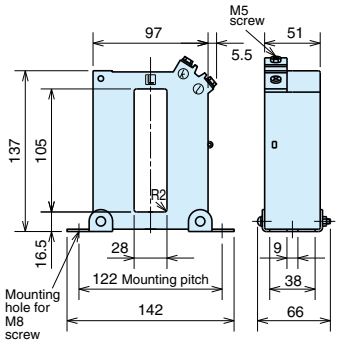

2500~4000A

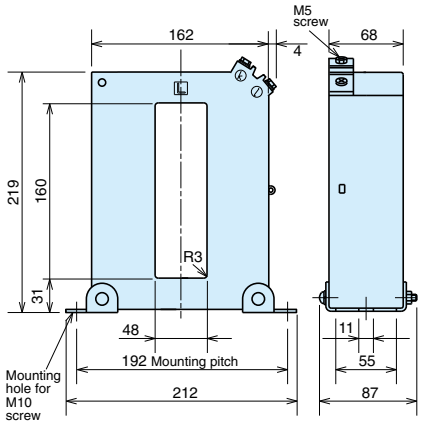

5000, 6300A

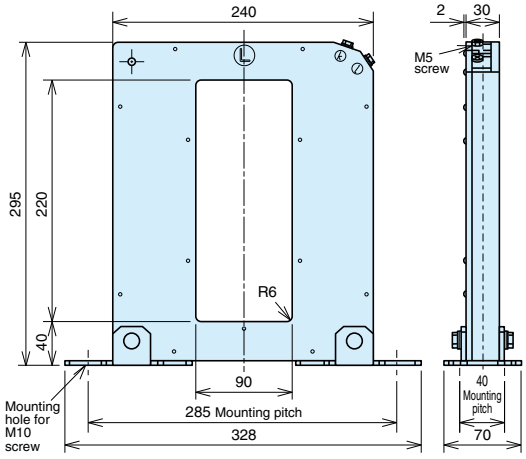

External ZCT for transformer ground wire

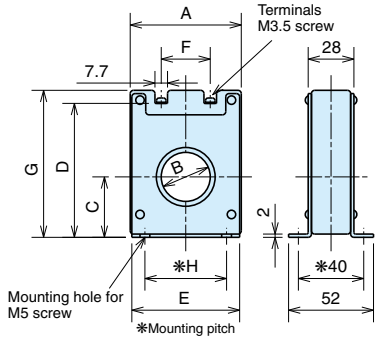

Dimensions (mm)

	A	B	C	D	E	F	G	H
ZT15B	48	15	29	62	46	15	70	25
ZT30B	68	30	37	82	66	30	90	50
ZT40B	85	40	43	92	81	40	100	50

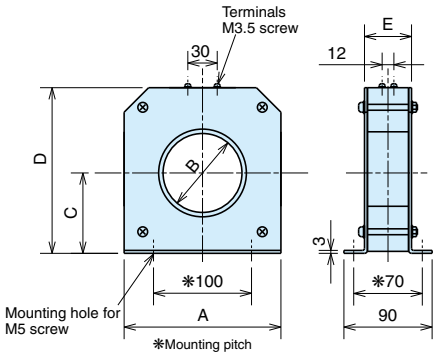

Dimensions (mm)

	A	B	C	D	E
ZT60B	140	60	73	150	46
ZT80B	160	80	82	169	48
ZT100B	185	100	93	190	50

External ZCT for load circuits

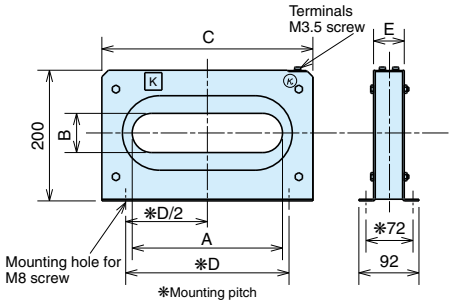

Dimensions (mm)

	A	B	C	D	E
ZCT163	230	60	323	250	47
ZCT323	370	108	460	400	47
ZCT324	500	108	600	550	48

ZCT with primary conductors

ZTA1200A (1200A)

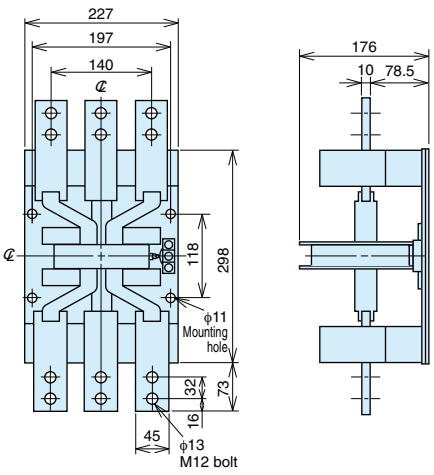

ZTA2000A (2000A)

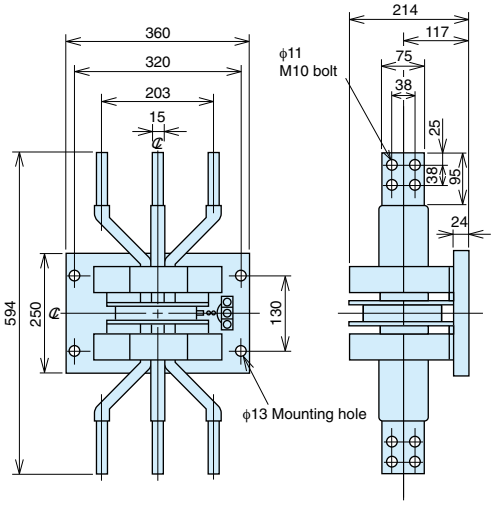

Outline dimensions

UVT external unit

UVT external unit (380 ~ 460V AC)

(mm)

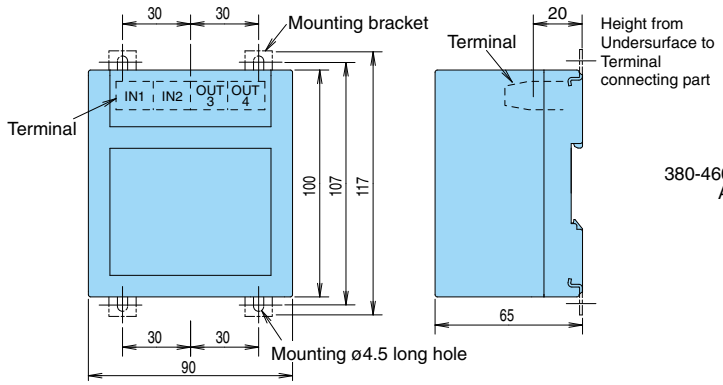

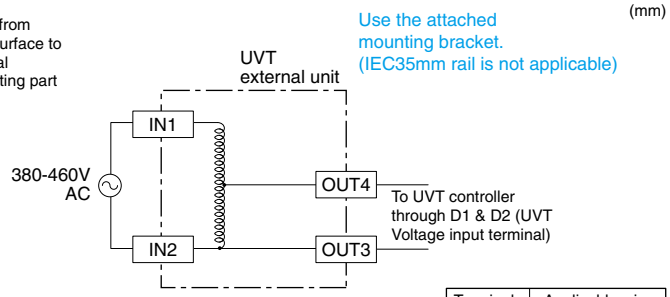

Terminals	Applicable wire
IN1	1.25~2.0mm²
IN2	
OUT3	
OUT4	

ETR external units

Display onto panel board (DP2)

(mm)

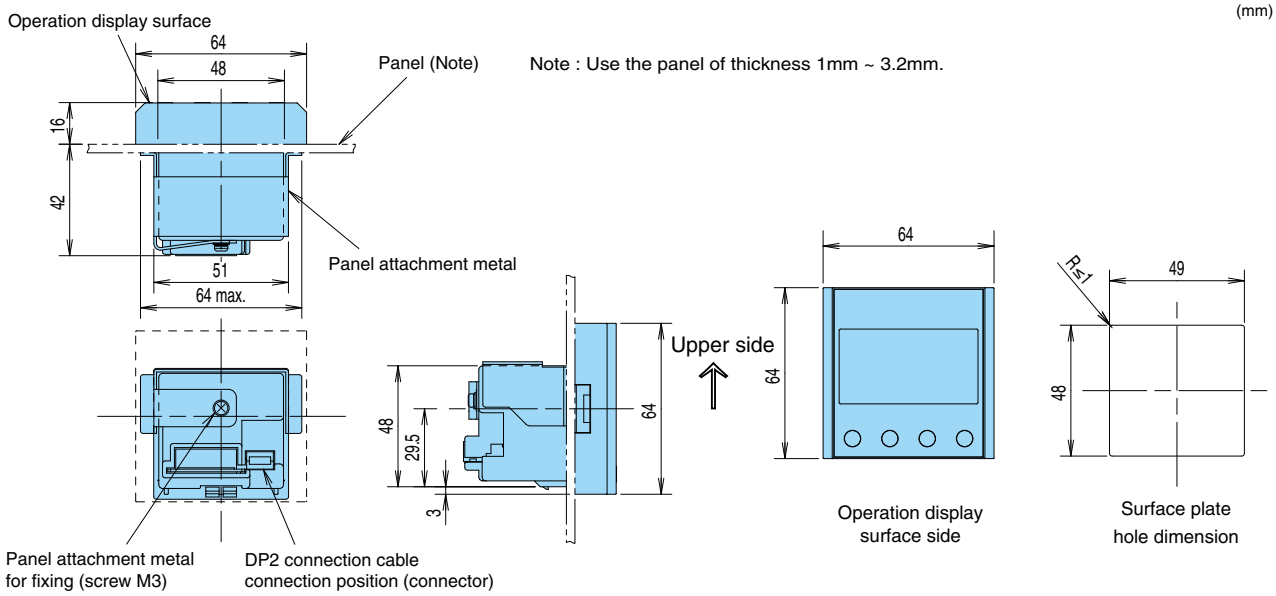

CC-Link, MODBUS interface unit (BIF-CC, BIF-MD)

(mm)

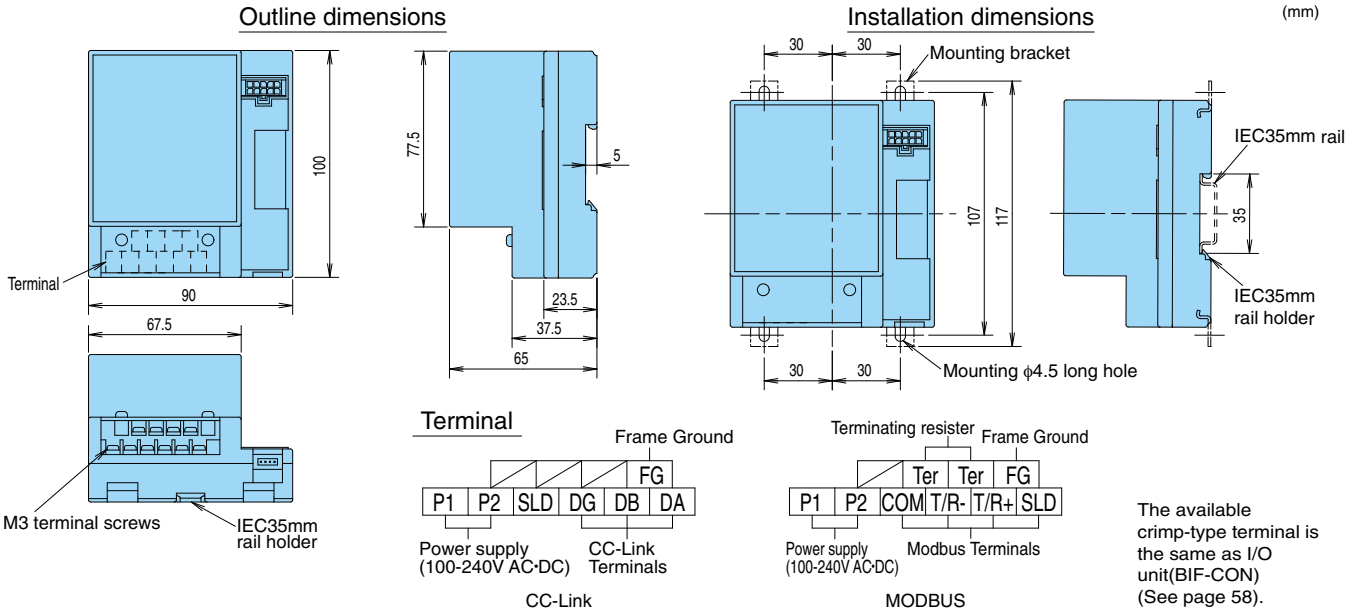

The available crimp-type terminal is the same as I/O unit(BIF-CON) (See page 58).

I/O unit (BIF-CON)

(mm)

Outline dimensions

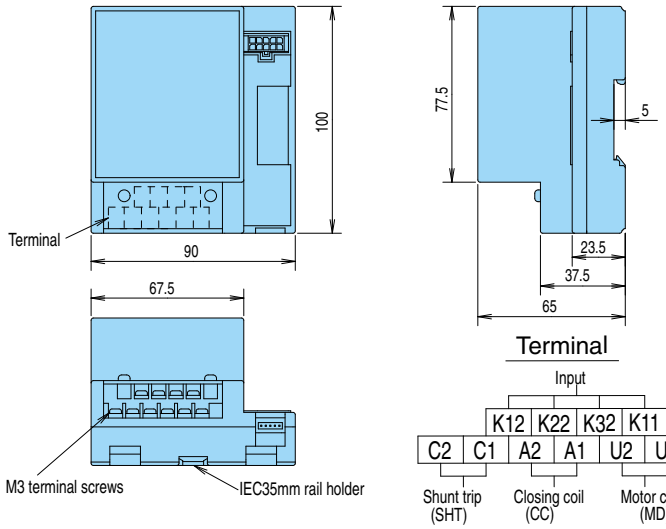

Installation dimensions

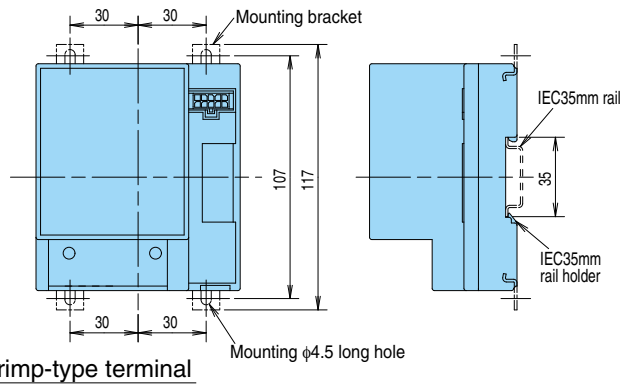

Terminal

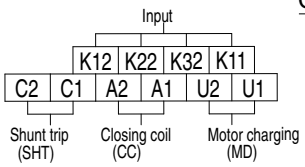

Crimp-type terminal

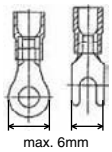

These terminals should be connected with wire using crimp-type terminal.
The available crimp-type terminal is shown in figure 3.4.

PROFIBUS-DP interface unit (BIF-PR)

(mm)

Outline dimensions

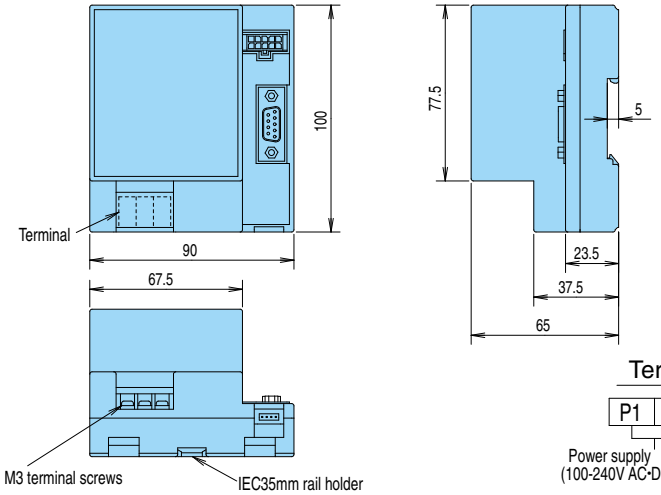

Installation dimensions

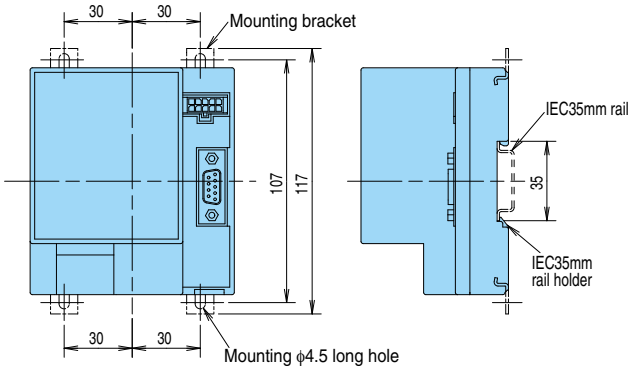

Terminal

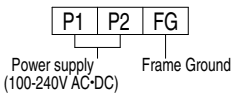

VT unit (VT)

(mm)

Outline dimensions

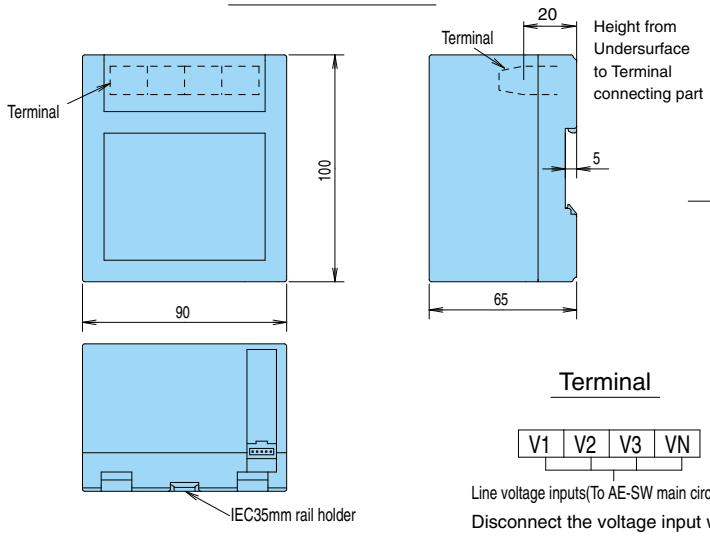

Installation dimensions

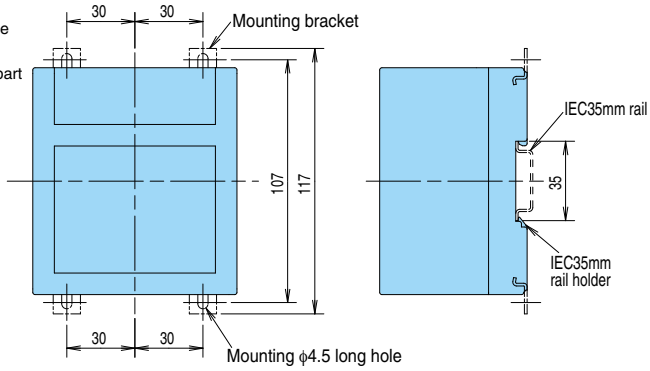

Terminal

Disconnect the voltage input wires during dielectric testing of main circuit.

Connecting wire

Terminals	Recommended wire	
	single core	Twisted core
V1, V2, V3, VN	0.2~6.0mm²	0.2~4.0mm² (AWG24~10)

Tool:Minus head screw driver
(Bit size Thickness 0.6mm, Width 3.5mm)

Pre-cautions when making connections

Use M12 screws (made of copper), spring washers, and small washers to connect to the conductors.
Clean the contact surface and securely tighten the screws with a appropriate torque.
The connecting area on main circuit terminal of ACB is different depending on the shape of the ACB's terminal.
Refer to the outline dimensions of P.45 to P.55.

Appropriate tightening torque

Screw size	Tightening torque(N·m)
M12	45±5

Please secure insulation distances between the conductors basing on the standard for switchgear assemblies like IEC 61439.

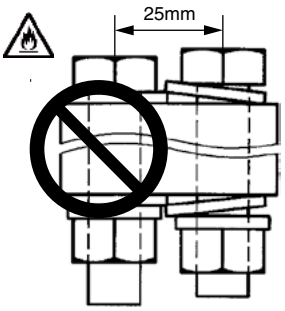

Please use small washer in order that washers don't overlap with each other.

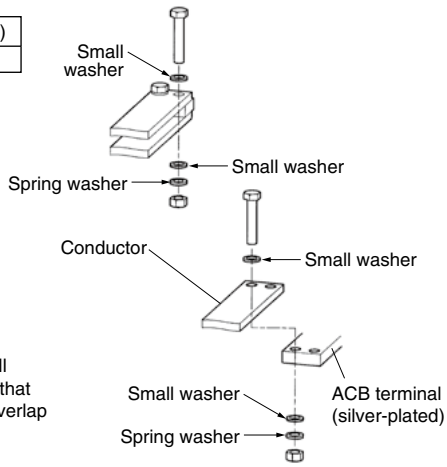

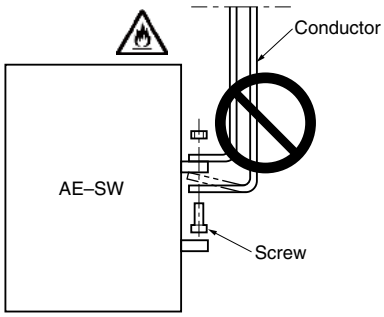

Please tighten screws after checking ACB's terminal and conductor certainly contact with each other.
Make sure the conductor doesn't apply the force to ACB's terminal in any direction.

Since fault current flowing through the conductors causes large electromagnetic forces, the conductors should be secured firmly, using the values in the below table as a reference. Max. distance between fixing support and ACB bus bar should be less than 200mm.

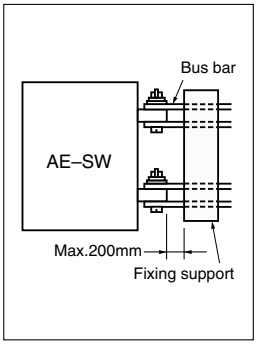

Electromagnetic force in N per 1m conductor
(in the case of three phase short circuit) (N)

Type	AE630-SW~ AE1600-SW	AE2000-SWA		AE2000-SW~ AE3200-SW	AE4000-SWA				AE4000-SW~ AE6300-SW
					Drawout type		Fixed type		
		3-Pole	4-Pole		3-Pole	4-Pole	3-Pole	4-Pole	
Conductor distance(mm) / Prospective fault current kA(pf)	85	115	105	130	190	170	152	145	262
30(0.2)	7700	5700	6300	5100	3500	3900	4300	4500	2500
42(0.2)	15100	11200	12200	9900	6800	7600	8500	8900	5000
50(0.2)	21400	15800	17300	14000	9600	10700	12000	12600	7000
65(0.2)	36100	26700	29300	23600	16200	18100	20200	21200	11800
75(0.2)	-	-	-	31500	21500	24100	26900	28200	15800
85(0.2)	-	-	-	40400	27600	30900	34500	36200	20000
100(0.2)	-	-	-	55800	38200	42700	47800	50100	27800
130(0.2)	-	-	-	-	-	-	-	-	47000

When selecting conductors to be connected to AE breakers, ensure that they have a sufficient current capacity. Refer to the right table.

Conductor Size(IEC 60947-1; Ambient Temp. 40℃ , Open air)

Rated current Max.(A)	Connecting conductors(copper bus bar)		
	Arrangement	Quantity	Conductor size(mm)
630	With long surface vertical	2	40 x 5
1000		2	60 x 5
1250		2	80 x 5
1600		2	100 x 5
2000		3	100 x 5
2500		4	100 x 5
3150(3200)*1		3	100 x 10
		2	150 x 10
4000 (AE4000-SWA Drawout type)		4	150 x 10
4000 (AE4000-SWA Fixed type)		3	150 x 10
4000 (AE4000-SW)		4	100 x 10
5000		4	150 x 10
6300		4	200 x 10

The left table shows the suitable connecting conductor size based on IEC 60947-1, which is assured from the test under Ambient temp. 40℃, Open air and testing configuration as shown in the following drawing.

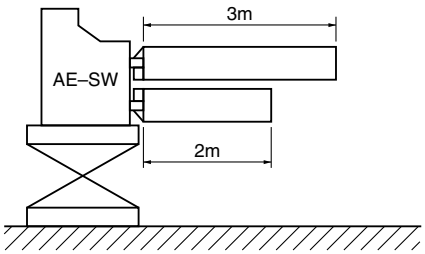

*1 The temperature rise of rated current 3200A conforms to the requirement of IEC 60947-1 for the connecting conductor size of a rated current 3150A. In case of more than 3200A, conductor sizes are not defined in IEC 60947-1.

Insulation distance

When a short-circuit current is interrupted, discharged hot gas blows out from the exhaust port of the arc extinguishing chamber, so provide a clearance as shown in the following table by “B”.

Note1:On the fixed type, maintenance is possible with following clearance.

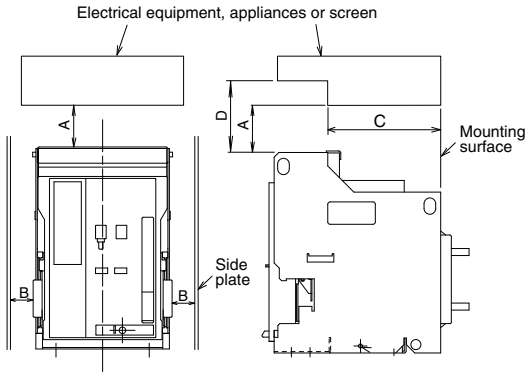

Dimensions (mm)

Type		AE630-SW~AE3200-SW AE2000-SWA AE4000-SWA		AE4000-SW~ AE6300-SW
Applicable voltage		600V AC or less	660V AC, 690V AC	690V AC or less
Fixed type	A	(Note 1) 0	(Note 1) 100	(Note 1) 200
	B	(Note 3) 50	(Note 3) 50	(Note 3) 50
	C	162	162	-
	D	(Note 2) 50	(Note 2) 50	200
Drawout type	A	0	100	200
	B	(Note 3) 50	(Note 3) 50	(Note 3) 50
	C	240	240	-
	D	(Note 2) 50	(Note 2) 50	(Note 2) 200

Note1 : 300mm or more clearance is necessary to inspect the arc-extinguishing chamber and contacts.
Note2 : The wiring space reguired for the control terminal block.
Note3 : When using mechanical interlock, door interlock, etc., dimension B becomes larger.

Service conditions

1. Normal service condition

Under ordinary conditions the following normal working conditions are all satisfied, the AE Series air circuit breaker may be used unless otherwise specified.

1. Ambient temperature
   A range of max. +40℃ to min. -5℃ is recommended.
   And the average over 24 hours must not exceed +35℃.
2. Altitude
   2,000m (6,600 feet) or less
3. Environmental conditions
   The air must be clean, and the relative humidity must be 85% or less at max. temp. +40℃. Do not use and store in atmospheres with sulfide gas and ammonia gas etc.
   ($H_2S \leq 0.01$ppm, $SO_2 \leq 0.1$ppm, $NH_3 <$ a few ppm.)
4. Installation conditions
   When installing the AE Series air circuit breaker, refer to the installation instructions in the catalogue and instruction manual.
5. Storage temperature
   A range of max. +60℃ to min. -20℃ is recommended to be stored.
   And the average over 24 hours must not exceed +35℃.
6. Guideline for replacement
   Within approx. 15 years. Please refer to the instruction manual.

2. Special service conditions

In case of special service condition, service life may become shorter in some cases.

1. Special environmental conditions
   High temperature and/or high humidity
   corrosive gas
2. High ambient temperature
   If the ambient temperature exceeds +40℃, the uninterrupted current rating will be reduced. Since the derating value is different depending on the applicable standard, refer to P60.
3. High altitude
   Since the heat radiation rate is reduced for use at the 2,000m or higher, accordingly the operating voltage, continuous current capacity and breaking capacity are derated. Moreover the insulation durability is also decreased owing to the atmospheric pressure.
   Please inquire us for further detail.

Precautions for mounting

● Standard tightening torque

Screw size	Tightening torque (N•m)
M12	45±5

● Mounting direction

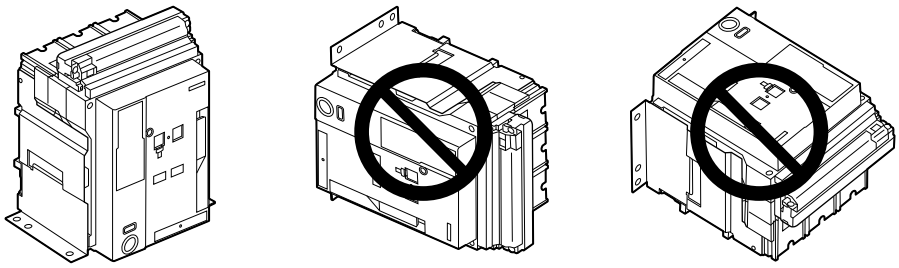

● Earth terminal

Unless there are any special circumstances, connect the earth terminal to the ground.

Internal resistance, reactance and power consumption (per pole)

Type	Connection	Internal resistance (mΩ)	Reactance (mΩ)	Power consumption (W)
AE630-SW	Fixed type	0.020	0.099	8
	Drawout type	0.031	0.147	12
AE1000-SW	Fixed type	0.020	0.095	20
	Drawout type	0.031	0.136	31
AE1250-SW	Fixed type	0.020	0.088	31
	Drawout type	0.031	0.135	48
AE1600-SW	Fixed type	0.020	0.099	51
	Drawout type	0.031	0.129	79
AE2000-SWA	Fixed type	0.020	0.120	80
	Drawout type	0.030	0.161	120
AE2000-SW	Fixed type	0.010	0.076	40
	Drawout type	0.018	0.122	72
AE2500-SW	Fixed type	0.010	0.084	63
	Drawout type	0.018	0.128	113
AE3200-SW	Fixed type	0.009	0.068	92
	Drawout type	0.015	0.096	154
AE4000-SWA	Fixed type	0.011	0.111	176
	Drawout type	0.015	0.106	240
AE4000-SW	Fixed type	0.009	0.070	144
	Drawout type	0.011	0.084	176
AE5000-SW	Fixed type	0.009	0.061	225
	Drawout type	0.011	0.081	275
AE6300-SW	Fixed type	0.008	0.059	318
	Drawout type	0.009	0.080	357

(Note) The above values are applicable for one pole.
The above values are measured values and can be used only for reference.

Deratings by ambient temperature

Deratings of Max. rated current by ambient temperature (at brandnew product in vertical connection)

(A)

Standard	Ambient Temperature	AE630-SW	AE1000-SW	AE1250-SW	AE1600-SW	AE2000-SWA	AE2000-SW	AE2500-SW	AE3200-SW	AE4000-SWA	AE4000-SW	AE5000-SW	AE6300-SW
JIS C 8201-2-1 Ann1 Ann2 IEC 60947-2 (Standard 40°C) NK, LR, DNV GL, BV, ABS, CCS (Standard 45°C)	40℃	630	1000	1250	1600	2000	2000	2500	3200	4000	4000	5000	6300
	45℃	630	1000	1250	1600	2000	2000	2500	3200	4000	4000	5000	6300
	50℃	630	1000	1250	1600	1900	2000	2500	3200	4000	4000	5000	5750
	55℃	630	1000	1250	1550	1800	2000	2450	3000	3800	3900	5000	5500
	60℃	630	1000	1200	1500	1700	2000	2350	2900	3600	3750	4750	5200

Deratings of Max. rated current by ambient temperature (at brandnew product in horizontal connection)

(A)

Standard	Ambient Temperature	AE630-SW	AE1000-SW	AE1250-SW	AE1600-SW	AE2000-SW	AE2500-SW	AE3200-SW
JIS C 8201-2-1 Ann1 Ann2 IEC 60947-2 (Standard 40°C) NK, LR, DNV GL, BV, ABS, CCS (Standard 45°C)	40℃	630	1000	1220	1400	1990	2140	2460
	45℃	630	1000	1160	1340	1900	2040	2350
	50℃	630	1000	1100	1280	1800	1940	2230
	55℃	630	1000	1030	1210	1700	1830	2110
	60℃	630	940	970	1140	1590	1720	1980

Deratings of Max. rated current by ambient temperature with Extension module, Display and Network (at brandnew product in vertical connection)

(A)

Standard	Ambient Temperature	AE630-SW	AE1000-SW	AE1250-SW	AE1600-SW	AE2000-SWA	AE2000-SW	AE2500-SW	AE3200-SW	AE4000-SWA	AE4000-SW	AE5000-SW	AE6300-SW
JIS C 8201-2-1 Ann1 Ann2 IEC 60947-2 (Standard 40℃) NK, LR, DNV GL, BV, ABS, CCS (Standard 45℃)	40℃	630	1000	1250	1600	2000	2000	2500	3200	4000	4000	5000	6300
	45℃	630	1000	1250	1600	1900	2000	2500	3200	3800	4000	5000	5750
	50℃	630	1000	1250	1440	1700	2000	2500	2880	3600	3750	4750	5200
	55℃	–	–	–	–	–	–	–	–	–	–	–	–
	60℃	–	–	–	–	–	–	–	–	–	–	–	–

* The above table shows the maximum rated current per each ambient temperature for both drawout type breaker and fixed type (at brandnew product), when breaker and bus bar are installed in open air.
* Connection bus bar is according to IEC60947-1. For AE3200-SW, AE4000-SWA, AE4000-SW, AE5000-SW and AE6300-SW, it is required to follow the manufacturer recommended size shown in Page 59.
* As for ambient temperature exceeding 60℃, please inquire us.
* The values mentioned in the table above are calculated basing on the experiment result of JIS C 8201-2 and IEC 60947-2. So, the real values could be different due to configuration within the panel. Therefore, please make sure to confirm the real values basing on assembly's standard like IEC 61439.
* Necessary to adjust the derating of Max. current taking into account the influences like a fever from other components inside the panel, the heats from conductors and air flows whithin the panel.

Discrimination table

AE-SW Series air circuit breakers provide easy selective co-ordination with branch circuit breakers.
For selective co-crdinations,refer to the following table.

230V AC sym kA

	Main circuit breaker / Unit breaking capacity / Branch circuit breaker		AE-SW											
			AE630-SW	AE1000-SW	AE1250-SW	AE1600-SW	AE2000-SWA	AE2000-SW	AE2500-SW	AE3200-SW	AE4000-SWA	AE4000-SW	AE5000-SW	AE6300-SW
			65	65	65	65	65	85	85	85	85	130	130	130
NF・S・NV・S・NF・L・NF・H・NV・H	NF32-SV	7.5	7.5	7.5	7.5	7.5	7.5	7.5	7.5	7.5	7.5	7.5	7.5	7.5
	NV32-SV	10	9(10)	10	10	10	10	10	10	10	10	10	10	10
	NF63-SV NV63-SV	15	9(10)	15	15	15	15	15	15	15	15	15	15	15
	NF63-HV NV63-HV	25	9(25)	25	25	25	25	25	25	25	25	25	25	25
	NF125-SV NV125-SV	50	9(50)	45(50)	50	50	50	50	50	50	50	50	50	50
	NF125-SEV NV125-SEV	85	9(65)	45(65)	50(65)	50(65)	50(65)	85	85	85	85	85	85	85
	NF125-SGV	85	16(65)	45(65)	65	65	65	85	85	85	85	85	85	85
	NF125-LGV	90	16(65)	45(65)	65	65	65	85	85	85	85	90	90	90
	NF125-HV NV125-HV	100	9(65)	50(65)	65	65	65	100	100	100	100	100	100	100
	NF125-HGV	100	16(65)	45(65)	65	65	65	85	85	85	85	100	100	100
	NF160-SGV	85	9.4(65)	25(65)	40(65)	65	65	85	85	85	85	85	85	85
	NF160-LGV	90	9.4(65)	25(65)	40(65)	65	65	85	85	85	85	90	90	90
	NF160-HGV	100	9.4(65)	25(65)	40(65)	65	65	85	85	85	85	100	100	100
	NF250-SV NF250-SEV NV250-SV NV250-SEV	85	9(65)	20(65)	22(65)	42(65)	42(65)	50(85)	85	85	85	85	85	85
	NF250-SGV	85	9.4(65)	25(65)	40(65)	65	65	85	85	85	85	85	85	85
	NF250-LGV	90	9.4(65)	25(65)	40(65)	65	65	85	85	85	85	90	90	90
	NF250-HV NF250-HEV NV250-HV NV250-HEV	100	9(65)	25(65)	40(65)	65	65	85	85	85	85	100	100	100
	NF250-HGV	100	9.4(65)	25(65)	40(65)	65	65	85	85	85	85	100	100	100
	NF400-SW NV400-SW	85	—	—	20(65)	30(65)	30(65)	48(75)	70(75)	85	85	85	85	85
	NF400-SEW NV400-SEW	85	9(65)	15(65)	20(65)	30(65)	30(65)	48(75)	70(75)	85	85	85	85	85
	NF400-HEW NV400-HEW	100	9(65)	15(65)	20(65)	30(65)	30(65)	48(75)	70(75)	85	85	100	100	100
	NF400-REW NV400-REW	150	9(65)	15(65)	20(65)	30(65)	30(65)	48(75)	70(75)	85	85	130	130	130
	NF630-SW NV630-SW	85	—	—	—	24(65)	24(65)	30(75)	40(75)	60(75)	60(75)	75(85)	75(85)	75(85)
	NF630-SEW NV630-SEW	85	—	15(65)	18(65)	24(65)	24(65)	30(75)	40(75)	60(75)	60(75)	75(85)	75(85)	75(85)
	NF630-HEW NV630-HEW	100	—	15(65)	18(65)	24(65)	24(65)	30(75)	40(75)	60(75)	60(75)	75(100)	75(100)	75(100)
	NF630-REW	150	—	15(65)	18(65)	24(65)	24(65)	30(75)	40(75)	60(75)	60(75)	75(100)	75(100)	75(100)
	NF800-SEW NV800-SEW	85	—	—	18(65)	24(65)	24(65)	30(75)	40(75)	60(75)	60(75)	75(85)	75(85)	75(85)
	NF800-HEW NV800-HEW	100	—	—	18(65)	24(65)	24(65)	30(75)	40(75)	60(75)	60(75)	75(100)	75(100)	75(100)
	NF800-REW	150	—	—	18(65)	24(65)	24(65)	30(75)	40(75)	60(75)	60(75)	75(100)	75(100)	75(100)
NF・C・NV・C	NF63-CV NV63-CV	7.5	7.5	7.5	7.5	7.5	7.5	7.5	7.5	7.5	7.5	7.5	7.5	7.5
	NF125-CV NV125-CV	30	9(30)	15(30)	18(30)	24(30)	24(30)	30	30	30	30	30	30	30
	NF250-CV NV250-CV	36	9(36)	15(36)	18(36)	24(36)	24(36)	36	36	36	36	36	36	36
	NF400-CW NV400-CW	50	—	15(50)	20(50)	27(50)	27(50)	42(50)	50	50	50	50	50	50
	NF630-CW NV630-CW	50	—	—	—	24(50)	24(50)	30(50)	40(50)	50	50	50	50	50
	NF800-CEW	50	—	—	18(50)	24(50)	24(50)	30(50)	40(50)	50	50	50	50	50
NF・U	NF125-RGV	150	65	65	65	65	65	85	85	85	85	130	130	130
	NF125-UV	200	65	65	65	65	65	85	85	85	85	130	130	130
	NF250-RGV	150	9(65)	65	65	65	65	85	85	85	85	130	130	130
	NF250-UV	200	9(65)	65	65	65	65	85	85	85	85	130	130	130
	NF400-UEW	200	9(65)	15(65)	18(65)	29(65)	29(65)	48(75)	85	85	85	130	130	130
	NF800-UEW	200	—	—	18(65)	24(65)	24(65)	30(75)	37(75)	68(75)	68(75)	85(100)	85(100)	85(100)

- The values in the table represent the max.rated current for both Series AE-SW air circuit breakers and branch breakers,and the selective co-ordination applies when the AE-SW series air circuit breakers instantaneous pick up is set to maximum.
- The numerals shown in parentheses are for AE-SW with MCR.(When set MCR).

440V AC sym kA

	Branch circuit breaker \ Main circuit breaker / Unit breaking capacity		AE-SW											
			AE630-SW	AE1000-SW	AE1250-SW	AE1600-SW	AE2000-SWA	AE2000-SW	AE2500-SW	AE3200-SW	AE4000-SWA	AE4000-SW	AE5000-SW	AE6300-SW
			65	65	65	65	65	85	85	85	85	130	130	130
NF-S・NV-S・NF-L・NF-H・NV-H	NF32-SV	2.5	2.5	2.5	2.5	2.5	2.5	2.5	2.5	2.5	2.5	2.5	2.5	2.5
	NV32-SV	5	5	5	5	5	5	5	5	5	5	5	5	5
	NF63-SV NV63-SV	7.5	7.5	7.5	7.5	7.5	7.5	7.5	7.5	7.5	7.5	7.5	7.5	7.5
	NF63-HV NV63-HV	10	9(10)	10	10	10	10	10	10	10	10	10	10	10
	NF63-HRV	30	9(30)	30	30	30	30	30	30	30	30	30	30	30
	NF125-SV NV125-SV	30	7(30)	20(30)	25(30)	30	30	30	30	30	30	30	30	30
	NF125-SEV NV125-SEV	36	7(36)	20(36)	25(36)	30(36)	36	36	36	36	36	36	36	36
	NF125-SGV	36	9(36)	20(36)	36	36	36	36	36	36	36	36	36	36
	NF125-LGV	50	9(50)	20(50)	36(50)	50	50	50	50	50	50	50	50	50
	NF125-HV NV125-HV	50	9(50)	30(50)	50	50	50	50	50	50	50	50	50	50
	NF125-HGV	65	9(65)	20(65)	36(65)	65	65	65	65	65	65	65	65	65
	NF160-SGV	36	9(36)	15(36)	25(36)	36	36	36	36	36	36	36	36	36
	NF160-LGV	50	9(50)	15(50)	25(50)	42(50)	42(50)	50	50	50	50	50	50	50
	NF160-HGV	65	9(65)	15(65)	25(65)	42(65)	42(65)	65	65	65	65	65	65	65
	NF250-SV NF250-SEV NV250-SV NV250-SEV	36	7(36)	14(36)	19(36)	25(36)	25(36)	36	36	36	36	36	36	36
	NF250-SGV	36	7(36)	15(36)	25(36)	36	36	36	36	36	36	36	36	36
	NF250-LGV	50	7(50)	15(50)	25(50)	42(50)	42(50)	50	50	50	50	50	50	50
	NF250-HV NF250-HEV NV250-HV NV250-HEV	70	7(65)	15(65)	25(65)	42(65)	42(65)	70	70	70	70	70	70	70
	NF250-HGV	65	7(65)	15(65)	25(65)	42(65)	42(65)	65	65	65	65	65	65	65
	NF400-SW NV400-SW	45	—	—	18(45)	24(45)	24(45)	33(45)	45(45)	45	45	45	45	45
	NF400-SEW NV400-SEW	50	9(50)	15(50)	18(50)	24(50)	24(50)	30(50)	39(50)	50	50	50	50	50
	NF400-HEW NV400-HEW	70	9(65)	15(65)	18(65)	24(65)	24(65)	30(70)	39(70)	70	70	70	70	70
	NF400-REW NV400-REW	125	9(65)	15(65)	18(65)	24(65)	24(65)	30(75)	39(75)	80	80	100	100	100
	NF630-SW NV630-SW	50	—	—	—	24(50)	24(50)	30(50)	37(50)	50	50	50	50	50
	NF630-SEW NV630-SEW	50	—	15(50)	18(50)	24(50)	24(50)	30(50)	37(50)	50	50	50	50	50
	NF630-HEW NV630-HEW	70	—	15(65)	18(65)	24(65)	24(65)	30(70)	37(70)	48(70)	48(70)	70	70	70
	NF630-REW	125	—	15(65)	18(65)	24(65)	24(65)	30(75)	37(75)	48(75)	48(75)	75(100)	75(100)	75(100)
	NF800-SEW NV800-SEW	50	—	—	18(50)	24(50)	24(50)	30(50)	37(50)	48(50)	48(50)	50	50	50
	NF800-HEW NV800-HEW	70	—	—	18(65)	24(65)	24(65)	30(70)	37(70)	48(70)	48(70)	70	70	70
	NF800-REW	125	—	—	18(65)	24(65)	24(65)	30(75)	37(75)	48(75)	48(75)	75(100)	75(100)	75(100)
NF-C・NV-C	NF63-CV NV63-CV	2.5	2.5	2.5	2.5	2.5	2.5	2.5	2.5	2.5	2.5	2.5	2.5	2.5
	NF125-CV NV125-CV	10	9(10)	10	10	10	10	10	10	10	10	10	10	10
	NF250-CV NV250-CV	25	9(25)	15(25)	18(25)	25	25	25	25	25	25	25	25	25
	NF400-CW NV400-CW	36	—	15(36)	18(36)	24(36)	24(36)	25(36)	36	36	36	36	36	36
	NF630-CW NV630-CW	36	—	—	—	24(36)	24(36)	30(36)	36	36	36	36	36	36
	NF800-CEW	36	—	—	18(36)	24(36)	24(36)	30(36)	36	36	36	36	36	36
NF-U	NF125-RGV	125	35(65)	65	65	65	65	85	85	85	85	125	125	125
	NF125-UV	200	50(65)	65	65	65	65	85	85	85	85	130	130	130
	NF250-RGV	125	9(65)	50(65)	65	65	65	85	85	85	85	125	125	125
	NF250-UV	200	9(65)	65	65	65	65	85	85	85	85	130	130	130
	NF400-UEW	200	9(65)	15(65)	18(65)	29(65)	29(65)	48(75)	85	85	85	130	130	130
	NF800-UEW	200	—	—	18(65)	24(65)	24(65)	30(75)	37(75)	68(75)	68(75)	85(100)	85(100)	85(100)

- The values in the table represent the max.rated current for both Series AE-SW air circuit breakers and branch breakers,and the selective co-ordination applies when the AE-SW series air circuit breakers instantaneous pick up is set to maximum.
- The numerals shown in parentheses are for AE-SW with MCR.(When set MCR).

Ordering information

Ordering information for Mitsubishi AE-SW series air circuit breaker (General use····WS Type, Special use····WB Type, Protective coordination use····WF Type)

Customer(name) _____ Order No. _____ Number of units ____ units

Type P11~12 AE 1600 -SW AE _____-SWA

Number of poles ☑ 3P (AE630-SW~AE4000-SWA) ☐ 4P | (AE4000-SW~AE6300-SW) ☐ 3P ☐ 4P HN Note15 ☐ 4P FN Note15

Current setting Ir 1600 A CT rating _____ A Note1 P11,P22

Applicable standard ☑ IEC 60947-2 ☐ CCC

Ambient temperature ☑ 40℃(Standard) ☐ Others ____℃ Note2

Connection ☐ Fixed type Note3 ☑ Drawout type Note3

Main circuit terminal P.13
- Horizontal terminal(FIX) (AE630~1600-SW / AE2000~3200-SW)
- Vertical terminal(FIX-VT) (AE2000-SWA / AE4000-SWA AE4000~6300-SW)
- ☑ Horizontal terminal(DR)
- Vertical terminal(DR-VT) AE2000-SWA / AE4000-SWA AE4000~6300-SW
- Front terminal(DR-FT) Note4

Drawout type accessories P19~20
- ☑ Cell switch(CL- 4 : 1 or 2 or 3 or 4) Note5
- ☐ Shorting b-contact(SBC- ☐ : 1 or 2 or 3 or 4 or 5)
- ☐ Lifting hooks(HP)
- ☑ Safety shutter(SST)
  - ☑ Shutter lock(SST-LOCK)
- ☐ Mis-insertion preventor(MIP)
- ☐ Test jumper(TJ)

☐ Vertical terminal adapter(VTA)
☐ Front terminal adapter(FTA)
Can be connected to the Horizontal terminals.

Electronic trip relay(ETR)

☑ With ETR

Type WS1 G1 – P1

Reset type ☑ Automatic Reset (Standard) ☐ Manual Reset (MRE)

Main setting module

WS1, WB1, WF1	AE630–1600-SW, AE2000–3200-SW, AE4000-SW
WS2, WB2, WF2	AE2000-SWA, AE4000-SWA, AE5000-SW
WS3, WB3, WF3	AE6300-SW

WS : General use
WB : INST only
WF : Protective coordination use

Optional setting module
- G1: Ground fault protection Note6
- N5: Neutral pole 50% protection Note7
- E1: Earth leakage protection
- AP: 2nd Additional Pre-alarm
- NA: Without optional setting

ETR Auxiliary Equipment
- ☐ Temperature alarm(TAL)
- ☐ MCR switch(MCR-SW) P36

Power supply
- P1: 100-240V AC•DC
- P2: 24-60V DC
- P3: 100-240V AC / 100-125V DC with output contact
- P4: 24-60V DC with output contact
- P5: 100-240V DC with output contact (SSR)
- ☐ Neutral CT(NCT) Note8
- ☐ External ZCT Note9 P34
  - ZCT ____
  - ZT ____ B
  - ZTA ____

Additional function P38
- ☑ Extension module(EX1)
  - ☑ Display(DP1)
  - ☐ Display onto panel board(DP2)
  - ☑ VT unit(VT)

Network P39
- ☐ BIF-CC
- ☐ BIF-PR
- ☐ BIF-MD
- ☐ BIF-CON
- ☐ BIF-CL

Wire system (when EX1 is specified)
- EX1
  - ☑ 3φ3W
  - ☐ 3φ4W
  - ☑ Normal connection : Note13
  - ☐ Reverse connection : Note14

☐ BARE without ETR

Electrical accessories P14~16

- ☑ Auxiliary switch (A and B contacts in the same quantity are used. Max. quantity: 5 each for A and B contacts)
  - ☑ Standard(AX 6 : 2 or 4 or 6 or 8 or 10)
  - ☐ High capacity(HAX ☐ : 2 or 4 or 6 or 8 or 10)
- ☑ Motor charging(MD)
  - ☑ 100–125V AC・DC
  - ☐ 200–250V AC・DC
  - ☐ 24V DC Note10
  - ☐ 48V DC
- ☑ Closing coil(CC)
  - ☑ 100–250V AC・DC
  - ☐ 24–48V DC
- ☑ Shunt trip device (SHT)
  - ☑ 100–250V AC・DC
  - ☐ 380–500V AC
  - ☐ 24–48V DC
- ☑ Under voltage trip device(UVT)
  - ☑ 100–120V AC
  - ☐ 200–240V AC
  - ☐ 380–460V AC
  - ☐ 24V DC
  - ☐ 48V DC
  - ☐ 100–110V DC
  - ☐ 120–125V DC

  Time delay
  - ☑ Inst(INST)
  - ☐ 0.5s(05)
  - ☐ 3.0s(30)

  Note:In case of 380-460V AC, the external transformer is attached

Mechanical accessories P17~18

- ☑ Push button cover(BC-L)
- ☑ Counter(CNT)
- ☐ Cylinder lock(CYL)
- ☐ Door interlock(DI) Note11
- ☐ Terminal cover(TTC)
- ☑ Door frame(DF)
- ☐ Dust cover(DUC)
- ☑ Interphase barrier(BA) Note12
- ☐ Mechanical interlock(MI)
  - ☐ for 2units(MI2)
  - ☐ for 3units(MI3) Note11

Note1: For AE630-SW and AE2000-SW Low rating type, please specify CT rating. Refer to Page 11 and Page 22.
Note2: There is a case to be derated by ambient temperature. Refer to Page 62.
Note3: As for the terminal for AE2000-SWA, AE4000-SWA and AE4000-SW~AE6300-SW, Vertical terminal type only is available. (FIX-VT or DR-VT)
Note4: Refer to Page 13 and Page 45-47.
Note5: This setting is available for change by customer later. A preliminary setting of CL at factory shipment is as follows.
CL1: 1C CL2: 1C1D CL3: 1C1T1D CL4: 2C1T1D
Note6: Not available for AE630-SW with CT rating : 250A or 315A or 500A.
Note7: Not available for WB1, WB2 and WB3 Main setting module.
N5 optional setting module is used for 3 phase 4 wires system.(4 Pole breaker or 3 pole breaker with Neutral CT)
Note8: Neutral CT is required for Ground fault or Neutral pole protection, when 3 Pole breaker is used for 3 phase 4 wires system.
Note9: For Earth leakage protection, it is required External ZCT.
Note10: 24V DC and 48V DC are not available for AE4000-SWA 4P and AE4000-SW~AE6300-SW.
Note11: The combined installation of DI and MI3 is not available.
Note12: Some module types are not provided BA. Refer to Page17.
Note13: Power Supply comes from the top terminals.
Note14: Power Supply comes from the bottom terminals.
Note15: Current capacity of the neutral poles
HN: 50% of the rated current
FN: 100% of the rated current (See page 49, 54 for the outline and dimensions.)

Remark

Order Issuer

Ordering information for Mitsubishi AE-SW series air circuit breaker (General use····WS Type, Special use····WB Type, Protective coordination use····WF Type)

Customer(name) _____ **Order No.** _____ **Number of units** ____ units

Type P.11~12 AE _____-SW AE _____-SWA

Number of poles ☐ 3P ☐ 4P (AE630-SW~AE4000-SWA) | AE4000-SW~AE6300-SW ☐ 3P ☐ 4P HN Note15 ☐ 4P FN Note15

Current setting Ir _____ A CT rating _____ A Note1 P.11,P.22

Applicable standard ☐ IEC 60947-2 ☐ CCC

Ambient temperature ☐ 40℃(Standard) ☐ Others _____℃ Note2

Connection ☐ Fixed type Note3 ☐ Drawout type Note3

Main circuit terminal P.13
- Horizontal terminal(FIX) (AE630-1600-SW / AE2000-3200-SW)
- Vertical terminal(FIX-VT) (AE2000-SWA / AE4000-SWA AE4000~6300-SW)
- ☐ Horizontal terminal(DR)
- ☐ Vertical terminal(DR-VT) AE2000-SWA / AE4000-SWA AE4000~6300-SW
- ☐ Front terminal(DR-FT) Note4

Drawout type accessories P.19~20
- ☐ Cell switch(CL- ☐: 1 or 2 or 3 or 4) Note5
- ☐ Shorting b-contact(SBC- ☐: 1 or 2 or 3 or 4 or 5)
- ☐ Lifting hooks(HP)
- ☐ Safety shutter(SST)
  - ☐ Shutter lock(SST-LOCK)
- ☐ Mis-insertion preventor(MIP)
- ☐ Test jumper(TJ)

☐ Vertical terminal adapter(VTA)
☐ Front terminal adapter(FTA)
Can be connected to the Horizontal terminals.

Electronic trip relay(ETR)

Reset type ☐ Automatic Reset (Standard) ☐ Manual Reset (MRE)

☐ With ETR

Type ☐☐-☐

Main setting module

WS1, WB1, WF1	AE630–1600-SW, AE2000–3200-SW, AE4000-SW
WS2, WB2, WF2	AE2000-SWA, AE4000-SWA, AE5000-SW
WS3, WB3, WF3	AE6300-SW

WS : General use
WB : INST only
WF : Protective coordination use

Optional setting module
- G1: Ground fault protection Note6
- N5: Neutral pole 50% protection Note7
- E1: Earth leakage protection
- AP: 2nd Additional Pre-alarm
- NA: Without optional setting

ETR Auxiliary Equipment
- ☐ Temperature alarm(TAL)
- ☐ MCR switch(MCR-SW) P36

Power supply
- P1: 100-240V AC•DC
- P2: 24-60V DC
- P3: 100-240V AC / 100-125V DC with output contact
- P4: 24-60V DC with output contact
- P5: 100-240V DC with output contact (SSR)
- ☐ Neutral CT(NCT) Note8
- ☐ External ZCT Note9 P.34
  - ZCT ☐
  - ZT ☐ B
  - ZTA ☐

Additional function P.38
- ☐ Extension module(EX1)
  - ☐ Display(DP1)
  - ☐ Display onto panel board(DP2)
  - ☐ VT unit(VT)
  - **Network** P.39
    - ☐ BIF-CC
    - ☐ BIF-PR
    - ☐ BIF-MD
    - ☐ BIF-CON
    - ☐ BIF-CL

Wire system (when EX1 is specified)
- EX1
  - ☐ 3φ3W
  - ☐ 3φ4W
  - ☐ Normal connection : Note13
  - ☐ Reverse connection : Note14

☐ BARE without ETR

Electrical accessories P.14~16
- ☐ Auxiliary switch A and B contacts in the same quantity are used. Max. quantity: 5 each for A and B contacts
  - ☐ Standard(AX ☐: 2 or 4 or 6 or 8 or 10)
  - ☐ High capacity(HAX ☐: 2 or 4 or 6 or 8 or 10)
- ☐ Motor charging(MD)
  - ☐ 100–125V AC・DC
  - ☐ 200–250V AC・DC
  - ☐ 24V DC Note10
  - ☐ 48V DC
- ☐ Closing coil(CC)
  - ☐ 100–250V AC・DC
  - ☐ 24–48V DC
- ☐ Shunt trip device (SHT)
  - ☐ 100–250V AC・DC
  - ☐ 380–500V AC
  - ☐ 24–48V DC
- ☐ Under voltage trip device(UVT)
  - ☐ 100–120V AC
  - ☐ 200–240V AC
  - ☐ 380–460V AC
  - ☐ 24V DC
  - ☐ 48V DC
  - ☐ 100–110V DC
  - ☐ 120–125V DC

  Time delay
  - ☐ Inst(INST)
  - ☐ 0.5s(05)
  - ☐ 3.0s(30)

  Note:In case of 380-460V AC, the external transformer is attached

Mechanical accessories P.17~18
- ☐ Push button cover(BC-L)
- ☐ Counter(CNT)
- ☐ Cylinder lock(CYL)
- ☐ Door interlock(DI) Note11
- ☐ Terminal cover(TTC)
- ☐ Door frame(DF)
- ☐ Dust cover(DUC)
- ☐ Interphase barrier(BA) Note12
- ☐ Mechanical interlock(MI)
  - ☐ for 2units(MI2)
  - ☐ for 3units(MI3) Note11

Note1: For AE630-SW and AE2000-SW Low rating type, please specify CT rating. Refer to Page 11 and Page 22.
Note2: There is a case to be derated by ambient temperature. Refer to Page 62.
Note3: As for the terminal for AE2000-SWA, AE4000-SWA and AE4000-SW~AE6300-SW, Vertical terminal type only is available. (FIX-VT or DR-VT)
Note4: Refer to Page 13 and Page 45-47.
Note5: This setting is available for change by customer later. A preliminary setting of CL at factory shipment is as follows.
CL1: 1C CL2: 1C1D CL3: 1C1T1D CL4: 2C1T1D
Note6: Not available for AE630-SW with CT rating : 250A or 315A or 500A.
Note7: Not available for WB1, WB2 and WB3 Main setting module.
N5 optional setting module is used for 3 phase 4 wires system.(4 Pole breaker or 3 pole breaker with Neutral CT)
Note8: Neutral CT is required for Ground fault or Neutral pole protection, when 3 Pole breaker is used for 3 phase 4 wires system.
Note9: For Earth leakage protection, it is required External ZCT.
Note10: 24V DC and 48V DC are not available for AE4000-SWA 4P and AE4000-SW~AE6300-SW.
Note11: The combined installation of DI and MI3 is not available.
Note12: Some module types are not provided BA. Refer to Page17.
Note13: Power Supply comes from the top terminals.
Note14: Power Supply comes from the bottom terminals.
Note15: Current capacity of the neutral poles
HN: 50% of the rated current
FN: 100% of the rated current (See page 49, 54 for the outline and dimensions.)

Remark

Order Issuer

Ordering information for Mitsubishi AE-SW series air circuit breaker (Generator protection use····WM Type)

Customer(name) _____ **Order No.** _____ **Number of units** ____ units

Type P.11~12 AE _____-SW AE _____-SWA

Number of poles ☐ 3P ☐ 4P (AE630-SW~AE4000-SWA) | ☐ 3P ☐ 4P HN Note15 ☐ 4P FN Note15 (AE4000-SW~AE6300-SW)

Current setting Ir _____ A Note1

Applicable standard ☐ LR ☐ BV ☐ DNV GL ☐ ABS ☐ CCS ☐ IEC 60947-2

Ambient temperature ☐ 40℃(Standard) ☐ Others _____℃ Note2

Connection ☐ Fixed type Note3 ☐ Drawout type Note3

Main circuit terminal P.13
- Horizontal terminal(FIX) (AE630~1600-SW / AE2000~3200-SW)
- Vertical terminal(FIX-VT) (AE2000-SWA / AE4000-SWA AE4000~6300-SW)
- ☐ Horizontal terminal(DR)
- ☐ Vertical terminal(DR-VT) AE2000-SWA / AE4000-SWA AE4000~6300-SW
- ☐ Front terminal(DR-FT) Note4

Drawout type accessories P.19~20
- ☐ Cell switch(CL- ☐: 1 or 2 or 3 or 4) Note5
- ☐ Shorting b-contact(SBC- ☐: 1 or 2 or 3 or 4 or 5)
- ☐ Lifting hooks(HP)
- ☐ Safety shutter(SST)
  - ☐ Shutter lock(SST-LOCK)
- ☐ Mis-insertion preventor(MIP)
- ☐ Test jumper(TJ)

☐ Vertical terminal adapter(VTA)
☐ Front terminal adapter(FTA)
Can be connected to the Horizontal terminals.

Electronic trip relay(ETR)
☐ With ETR

Reset type ☐ Automatic Reset (Standard) ☐ Manual Reset (MRE)

Type ☐ ☐ – ☐

● Main setting module

WM1	AE630–1600-SW, AE2000–3200-SW, AE4000-SW
WM2	AE2000-SWA, AE4000-SWA, AE5000-SW
WM3	AE6300-SW

WM : Generator protection use

Specify a setting value,if required.
P.27,28,31~33
- LTD pick-up current : I_L ☐
- LTD time: T_L ☐
- STD pick-up current : I_{sd} ☐
- STD time: T_{sd} ☐
- INST pick-up current:I_i ☐
- Pre-alarm current:I_p ☐
- Othters ( )

● Optional setting module
- G1: Ground fault protection Note6
- N5: Neutral pole 50% protection Note7
- E1: Earth leakage protection
- AP: 2nd Additional Pre-alarm
- NA: Without optional setting

● ETR Auxiliary Equipment
- ☐ Temperature alarm(TAL)
- ☐ MCR switch(MCR-SW) P.36

● Power supply
- P1: 100-240V AC•DC
- P2: 24-60V DC
- P3: 100-240V AC / 100-125V DC with output contact
- P4: 24-60V DC with output contact
- P5: 100-240V DC with output contact (SSR)
- ☐ Neutral CT(NCT) Note8
- ☐ External ZCT Note9
  - P.34 ZCT ☐
  - ZT ☐ B
  - ZTA ☐

Additional function P.38
- ☐ Extension module(EX1)
  - ☐ Display(DP1)
  - ☐ Display onto panel board(DP2)
  - ☐ VT unit(VT)

Network P.39
- ☐ BIF-CC
- ☐ BIF-PR
- ☐ BIF-MD
- ☐ BIF-CON
- ☐ BIF-CL

Wire system (when EX1 is specified)
EX1
- ☐ 3φ3W
- ☐ 3φ4W
- ☐ Normal connection : Note13
- ☐ Reverse connection : Note14

Electrical accessories P.14~16
- ☐ Auxiliary switch (A and B contacts in the same quantity are used. Max. quantity: 5 each for A and B contacts)
  - ☐ Standard(AX ☐: 2 or 4 or 6 or 8 or 10)
  - ☐ High capacity(HAX ☐: 2 or 4 or 6 or 8 or 10)
- ☐ Motor charging(MD)
  - ☐ 100–125V AC・DC
  - ☐ 200–250V AC・DC
  - ☐ 24V DC Note10
  - ☐ 48V DC
- ☐ Closing coil(CC)
  - ☐ 100–250V AC・DC
  - ☐ 24–48V DC
- ☐ Shunt trip device (SHT)
  - ☐ 100–250V AC・DC
  - ☐ 380–500V AC
  - ☐ 24–48V DC
- ☐ Under voltage trip device(UVT)
  - ☐ 100–120V AC
  - ☐ 200–240V AC
  - ☐ 380–460V AC
  - ☐ 24V DC
  - ☐ 48V DC
  - ☐ 100–110V DC
  - ☐ 120–125V DC

  Time delay
  - ☐ Inst(INST)
  - ☐ 0.5s(05)
  - ☐ 3.0s(30)

  Note:In case of 380-460V AC, the external transformer is attached

Mechanical accessories P.17~18
- ☐ Push button cover(BC-L)
- ☐ Counter(CNT)
- ☐ Cylinder lock(CYL)
- ☐ Door interlock(DI) Note11
- ☐ Terminal cover(TTC)
- ☐ Door frame(DF)
- ☐ Dust cover(DUC)
- ☐ Interphase barrier(BA) Note12
- ☐ Mechanical interlock(MI)
  - ☐ for 2units(MI2)
  - ☐ for 3units(MI3) Note11

Note1: Please specify current setting (Ir) from the specification table. Refer to Page 11 and 12.
Note2: There is a case to be derated by ambient temperature. Refer to Page 62.
Note3: As for the terminal for AE2000-SWA, AE4000-SWA and AE4000-SW~AE6300-SW, Vertical terminal type only is available. (FIX-VT or DR-VT)
Note4: Refer to Page 13 and Page 45-47.
Note5: This setting is available for change by customer later. A preliminary setting of CL at factory shipment is as follows.
CL1: 1C CL2: 1C1D CL3: 1C1T1D CL4: 2C1T1D
Note6: Not available for AE630-SW with CT rating : 250A or 315A or 500A.
Note7: N5 optional setting module is used for 3 phase 4 wires system.(4 Pole breaker or 3 pole breaker with Neutral CT)
Note8: Neutral CT is required for Ground fault or Neutral pole protection, when 3 Pole breaker is used for 3 phase 4 wires system.
Note9: For Earth leakage protection, it is required External ZCT.
Note10: 24V DC and 48V DC are not available for AE4000-SWA 4P and AE4000-SW~AE6300-SW.
Note11: The combined installation of DI and MI3 is not available.
Note12: Some module types are not provided BA. Refer to Page17.
Note13: Power Supply comes from the top terminals.
Note14: Power Supply comes from the bottom terminals.
Note15: Current capacity of the neutral poles
HN: 50% of the rated current
FN: 100% of the rated current (See page 49, 54 for the outline and dimensions.)
Note16: AE4000-SW~AE6300-SW don't apply to CCS marine approval.

Remark

Order Issuer

Ordering information for MITSUBISHI AE-SW series air circuit breaker (General use····WS relay with Ampere Meter and Fault Memory "DP3")

Customer(name) _____ **Order No.** _____ **Number of units** ____ units

Type AE _____-SW AE _____-SWA

Number of poles ☐ 3P (AE630-SW~AE4000-SWA) ☐ 4P ☐ 3P (AE4000-SW~AE6300-SW) ☐ 4P HN Note9 ☐ 4P FN Note9

Current setting Ir _____ A **CT rating** _____ A Note1

Applicable standard ☐ IEC60947-2 ☐ CCC

Ambient temperature ☐ 40℃(Standard) ☐ Others _____℃ Note2

Connection ☐ Fixed type Note3 ☐ Drawout type Note3

Main circuit terminal
- Horizontal terminal(FIX) (AE630~1600-SW / AE2000~3200-SW)
- Vertical terminal(FIX-VT) (AE2000-SWA / AE4000-SWA AE4000~6300-SW)
- ☐ Horizontal terminal(DR)
- ☐ Vertical terminal(DR-VT) (AE2000-SWA / AE4000-SWA AE4000 to 6300-SW)
- ☐ Front terminal(DR-FT)

Drawout type accessories
- ☐ Cell switch(CL- ☐: 1 or 2 or 3 or 4) Note4
- ☐ Shorting b-contact(SBC- ☐: 1 or 2 or 3 or 4 or 5)
- ☐ Lifting hooks(HP)
- ☐ Safety shutter(SST)
  - ☐ Shutter lock(SST-LOCK)
- ☐ Mis-insertion preventer(MIP)
- ☐ Test jumper(TJ)

☐ Vertical terminal adapter(VTA)
☐ Front terminal adapter(FTA)
Can be connected to the Horizontal terminals.

Electronic trip relay(ETR) Note11

■ With ETR

Type ☐☐-☐ ; DP3

Reset type ☐ Automatic Reset (Standard) ☐ Manual Reset (MRE)

● **Main setting** Note10

WS1	AE630–1600-SW, AE2000–3200-SW, AE4000-SW
WS2	AE2000-SWA, AE4000-SWA, AE5000-SW
WS3	AE6300-SW

WS : General use

● **Optional setting**
G1: Ground fault protection
NA: Without optional setting

● **ETR Auxiliary Equipment** Note10
☐ MCR switch(MCR-SW)

● **Power supply**
P1: 100-240V AC·DC
P2: 24-60V DC
P3: 100-240V AC / 100-125V DC with output contact
P4: 24-60V DC with output contact
P5: 100-240V DC with output contact (SSR)

Connection
☐ 3φ3W
☐ 3φ4W

☐ Neutral CT(NCT) Note5

Electrical accessories
- ☐ Auxiliary switch (A and B contacts in the same quantity are used. Max. quantity: 5 each for A and B contacts.)
  - ☐ Standard(AX ☐: 2 or 4 or 6 or 8 or 10)
  - ☐ High capacity(HAX ☐: 2 or 4 or 6 or 8 or 10)
- ☐ Motor charging(MD)
  - ☐ 100–125V AC・DC
  - ☐ 200–250V AC・DC
  - ☐ 24V DC Note6
  - ☐ 48V DC Note6
- ☐ Closing coil(CC)
  - ☐ 100–250V AC・DC
  - ☐ 24–48V DC
- ☐ Shunt trip device (SHT)
  - ☐ 100–250V AC・DC
  - ☐ 380–500V AC
  - ☐ 24–48V DC
- ☐ Under voltage trip device(UVT)
  - ☐ 100–120V AC
  - ☐ 200–240V AC
  - ☐ 380–460V AC
  - ☐ 24V DC
  - ☐ 48V DC
  - ☐ 100–110V DC
  - ☐ 120–125V DC

  Time delay
  - ☐ Inst(INST)
  - ☐ 0.5s(05)
  - ☐ 3.0s(30)

  Note:In the case of 380-460V AC, the external transformer is attached.

Mechanical accessories
- ☐ Push button cover(BC-L)
- ☐ Counter(CNT)
- ☐ Cylinder lock(CYL)
- ☐ Door interlock(DI) Note7
- ☐ Terminal cover(TTC)
- ☐ Door frame(DF)
- ☐ Dust cover(DUC)
- ☐ Interphase barrier(BA) Note8
- ☐ Mechanical interlock(MI)
  - ☐ for 2units(MI2)
  - ☐ for 3units(MI3) Note7

Note1: For AE2000-SW, low rating current types are available.
Low rating types (250A, 315A, 500A) are not available for AE630-SW.

Note2: There is a case to be derated by ambient temperature. Refer to Page 62.

Note3: As for the terminal for AE2000-SWA, AE4000-SWA and AE4000-SW~AE6300-SW, Vertical terminal type only is available. (FIX-VT or DR-VT)

Note4: This setting is available for change by customer later. A preliminary setting of CL at factory shipment is as follows.
CL1:1C CL2:1C1D CL3:1C1T1D CL4:2C1T1D

Note5: Neutral CT is required for Ground fault or Neutral pole protection, when 3-pole breaker is used for 3 phase 4 wire system.

Note6: 24V DC and 48V DC are not available for AE4000-SWA 4P or AE4000 to 6300-SW.

Note7: The combined installation of DI and MI3 is not available.

Note8: Some module types are not provided BA. Refer to Page17.

Note9: Current capacity of the neutral poles
HN: 50% of the rated current
FN: 100% of the rated current (See page 49, 54 for the outline and dimensions.)

Note10: If MCR switch is ordered, INST/MCR characteristic will be installed.
INST/MCR characteristics can be switched using a setting dial.

Note11: For WS relay with ampere meter and fault memory (DP3),
ETR including optinal setting such as "G1" has integrated structure.
So, optinal setting such as G1 for WS relay with DP3 should be specified before ordering as those parts cannot be installed with ETR after factory shipment.

Remark

Order Issuer

Index

Revising history

The main revising contents are below.
*from 19A (Y-0622J printed on December 2019) to 20A (Y-0622K printed on September 2020)

- Page 3-4 : Add the Warranty
- Page 11-12 : Add “Utilization category”, “EMC environment condition” and Note 11,12,13,14,15
  Correct the values on “Weight (kg)”
- Page 15 : Add Note 2,3,4,5 for Closing coil and Note 3,4 for Shunt trip device
- Page 16 : Add Note 8 for Under voltage trip device
- Page 44 : Add the explanations for FG and Shorting b-contact
- Page 45-53 : Change how to describe the size of main circuit terminals.
- Page 60 : Add “Precautions for mounting”
- Page 62 : Add the table for derating of Max. rated current by ambient temperature in horizontal connection
- Page 69 : Add “Index”
- Page 70 : Add “Revising history”

MEMO

Service network

Country/Region	Corporation Name	Address	Telephone
Australia	Mitsubishi Electric Australia Pty. Ltd.	348 Victoria Road, Rydalmere, N.S.W. 2116, Australia	+61-2-9684-7777
Algeria	Mec Casa	Rue i N 125 Hay-Es-Salem, 02000, W-Chlef, Algeria	+213-27798069
Bangladesh	PROGRESSIVE TRADING CORPORATION	HAQUE TOWER,2ND FLOOR,610/11,JUBILEE ROAD, CHITTAGONG, BANGLADESH	+880-31-624307
	ELECTRO MECH AUTOMATION& ENGINEERING LTD.	SHATABDI CENTER, 12TH FLOOR, SUITES: 12-B, 292, INNER CIRCULAR ROAD, FAKIRA POOL, MOTIJHEEL, DHAKA-1000, BANGLADESH	+88-02-7192826
Belarus	Tehnikon	Oktyabrskaya 19, Off. 705, BY-220030 Minsk, Belarus	+375 (0)17 / 210 46 26
Belgium	Koning & Hartman B.V.	Woluwelaan 31, BE-1800 Vilvoorde, Belgium	+32 (0)2 / 2570240
Brazil	Mitsubishi Electric do Brasil Comércio e Serviços Ltda.	Avenida Adelino Cardana, 293 21 andar Bethaville, Barueri SP, Brasil	+55-11-4689-3000
Cambodia	DHINIMEX CO.,LTD	#245, St. Tep Phan, Phnom Penh, Cambodia	+855-23-997-725
Central America	Automation International LLC	7050 W. Palmetto Park Road Suite #15 PMB #555, Boca Raton, FL 33433	+1-561-237-5228
Chile	Rhona S.A. (Main office)	Vte. Agua Santa 4211 Casilla 30-D (P.O. Box) Vina del Mar, Chile	+56-32-2-320-600
China	Mitsubishi Electric Automation (China) Ltd.	Mitsubishi Electric Automation Building, No.1386 Hongqiao Road, Shanghai, China 200336	+86-21-2322-3030
	Mitsubishi Electric Automation (China) Ltd. BeiJing	5/F,ONE INDIGO,20 Jiuxianqiao Road Chaoyang District,Beijing, China 100016	+86-10-6518-8830
	Mitsubishi Electric Automation (China) Ltd. ShenZhen	Level 8, Galaxy World Tower B, 1 Yabao Road, Longgang District, Shenzhen, China 518129	+86-755-2399-8272
	Mitsubishi Electric Automation (China) Ltd. GuangZhou	Rm.1006, A1 Times E-Park, No.276-282, Hanxi Road East, Zhongcun Street, Panyu Distric, Guangzhou, China 510030	+86-20-8923-6730
	Mitsubishi Electric Automation (China) Ltd. ChengDu	1501-1503,15F, Guang-hua Centre Building-C, No.98 North Guang Hua 3th Rd Chengdu, China 610000	+86-28-8446-8030
	Mitsubishi Electric Automation (Hong Kong) Ltd.	20/F., Cityplaza One, 1111 king's Road, Taikoo shing, Hong Kong	+852-2510-0555
Colombia	Proelectrico Representaciones S.A.	Carrera 42 Nº 75 – 367 Bodega 109, Itagüi, Medellín, Antioquia, Colombia	+57-4-4441284
Czech Republic	AUTOCONT CONTROL SYSTEMS S.R.O	Technologická 374/6, CZ-708 00 Ostrava - Pustkovec	+420 595 691 150
Denmark	BEIJER ELECTRONICS A/S	LYKKEGARDSVEJ 17, DK-4000 ROSKILDE, Denmark	+45 (0)46/ 75 76 66
Egypt	Cairo Electrical Group	9, Rostoum St. Garden City P.O. Box 165-11516 Maglis El-Shaab,Cairo - Egypt	+20-2-27961337
France	Mitsubishi Electric Europe B.V. French Branch	FR-92741 Nanterre Cedex	+33 (0)1 55 68 57 01
Germany	Mitsubishi Electric Europe B.V.	Mitsubishi-Electric-Platz 1, 40882 Ratingen, Germany	+49 (0) 2102 4860
Greece	KALAMARAKIS - SAPOUNAS S.A.	IONIAS & NEROMILOU STR., CHAMOMILOS ACHARNES, ATHENS, 13678 Greece	+30-2102 406000
	UTECO	5, MAVROGENOUS STR., 18542 PIRAEUS, Greece	+30-211-1206-900
Hungary	Meltrade Ltd.	Fertö utca 14. HU-1107 Budapest, Hungary	+36 (0)1-431-9726
India	Mitsubishi Electric India Private Limited	2nd Floor, Tower A&B, Cyber Greens, DLF Cyber City, DLF Phase-III, Gurgaon - 122 022 Haryana, India	+91-124-4630300
	Mitsubishi Electric India Private Limited Pune Sales Office	ICC-Devi Gaurav Technology Park, Unit no. 402, Fourth Floor, Survey no. 191-192 (P), Opp. Vallabh Nagar Bus Depot, Pune – 411018, Maharashtra, India	+91-20-68192100
	Mitsubishi Electric India Private Limited FA Center	204-209, 2nd Floor, 31FIVE, Corporate Road, Prahladnagar, Ahmedabad 380015,Gujarat. India	+91-79677-77888
Indonesia	P.T. Sahabat Indonesia	P.O.Box 5045 Kawasan Industri Pergudangan, Jakarta, Indonesia	+62-(0)21-6610651-9
Ireland	Mitsubishi Electric Europe B.V.	Westgate Business Park, Ballymount, IRL-Dublin 24, Ireland	+353 (0)1-4198800
Israel	Gino Industries Ltd.	26, Ophir Street IL-32235 Haifa, Israel	+972 (0)4-867-0656
Italy	Mitsubishi Electric Europe B.V.	Viale Colleoni 7, I-20041 Agrate Brianza (MI), Italy	+39 039-60531
Kazakhstan	Kazpromavtomatika	Ul. Zhambyla 28, KAZ - 100017 Karaganda	+7-7212-501000
Korea	Mitsubishi Electric Automation Korea Co., Ltd	9F Gangseo Hangang xi-tower A, 401 Yangcheon-ro, Gangseo-gu, Seoul 07528 Korea	+82-2-3660-9573
Laos	AROUNKIT CORPORATION IMPORT- EXPORT SOLE CO.,LTD	SAPHANMO VILLAGE. SAYSETHA DISTRICT, VIENTIANE CAPITAL, LAOS	+856-20-415899
Lebanon	Comptoir d'Electricite Generale-Liban	Cebaco Center - Block A Autostrade Dora, P.O. Box 11-2597 Beirut - Lebanon	+961-1-240445
Lithuania	Rifas UAB	Tinklu 29A, LT-5300 Panevezys, Lithuania	+370 (0)45-582-728
Malaysia	Mittric Sdn Bhd	No. 5 Jalan Pemberita U1/49, Temasya Industrial Park, Glenmarie 40150 Shah Alam,Selangor, Malaysia	+603-5569-3748
Malta	ALFATRADE LTD	99 PAOLA HILL, PAOLA PLA 1702, Malta	+356 (0)21-697-816
Maroco	SCHIELE MAROC	KM 7,2 NOUVELLE ROUTE DE RABAT AIN SEBAA, 20600 Casablanca, Maroco	+212 661 45 15 96
Myanmar	Peace Myanmar Electric Co.,Ltd.	NO137/139 Botahtaung Pagoda Road, Botahtaung Town Ship 11161,Yangon,Myanmar	+95-(0)1-202589
Nepal	Watt&Volt House	KHA 2-65,Volt House Dillibazar Post Box:2108,Kathmandu,Nepal	+977-1-4411330
Netherlands	Imtech Marine & Offshore B.V.	Sluisjesdijk 155, NL-3087 AG Rotterdam, Netherlands	+31 (0)10-487-19 11
North America	Mitsubishi Electric Automation, Inc.	500 Corporate Woods Parkway, Vernon Hills, IL 60061 USA	+847-478-2100
Nowway	Scanelec AS	Leirvikasen 43B, NO-5179 Godvik, Norway	+47 (0)55-506000
Mexico	Mitsubishi Electric Automation, Inc. Mexico Branch	Blvd. Miguel de Cervantes Saavedra 301, Torre Norte Piso 5, Col. Ampliación Granada, Miguel Hidalgo, Ciudad de México, CP 11520, México	+52-55-3067-7511
Middle East Arab Countries & Cyprus	Comptoir d'Electricite Generale-International-S.A.L.	Cebaco Center - Block A Autostrade Dora P.O. Box 11-1314 Beirut - Lebanon	+961-1-240430
Pakistan	Prince Electric Co.	2-P GULBERG II, LAHORE, 54600, PAKISTAN	+92-42-575232, 5753373
Peru	Rhona S.A. (Branch office)	Avenida Argentina 2201, Cercado de Lima	+51-1-464-4459
Philippines	Edison Electric Integrated, Inc.	24th Fl. Galleria Corporate Center, Edsa Cr. Ortigas Ave., Quezon City Metro Manila, Philippines	+63-(0)2-634-8691
Poland	Mitsubishi Electric Europe B.V. Polish Branch	Krakowska 48, 32-083 Balice, Poland	+48 12 347 65 00
Republic of Moldova	Intehsis SRL	bld. Traian 23/1, MD-2060 Kishinev, Moldova	+373 (0)22-66-4242
Romania	Sirius Trading & Services SRL	RO-060841 Bucuresti, Sector 6 Aleea Lacul Morii Nr. 3	+40-(0)21-430-40-06
Russia	Mitsubishi Electric (Russia) LLC	2 bld.1, Letnikovskaya street, Moscow, 115114, Russia	+7 495 721-2070
Saudi Arabia	Center of Electrical Goods	Al-Shuwayer St. Side way of Salahuddin Al-Ayoubi St. P.O. Box 15955 Riyadh 11454 - Saudi Arabia	+966-1-4770149
Singapore	Mitsubishi Electric Asia Pte. Ltd.	307 Alexandra Road, Mitsubishi Electric Building, Singapore 159943	+65-6473-2308
Slovakia	PROCONT, Presov	Kupelna 1/, SK - 08001 Presov, Slovakia	+421 (0)51-7580 611
	SIMAP	Jana Derku 1671, SK - 91101 Trencin, Slovakia	+421 (0)32 743 04 72
Slovenia	Inea RBT d.o.o.	Stegne 11, SI-1000 Ljubljana, Slovenia	+386 (0)1-513-8116
South Africa	CBI-electric: low voltage	Private Bag 2016, ZA-1600 Isando Gauteng, South Africa	+27-(0)11-9282000
Spain	Mitsubishi Electric Europe B.V. Spanish Branch	Carretera de Rubí 76-80, E-08190 Sant Cugat del Vallés (Barcelona), Spain	+34 (0)93-565-3131
Sweden	Mitsubishi Electric Europe B.V. (Scandinavia)	Hedvig Möllers gata 6, 223 55 Lund, Sweden	+46 (0)8-625-10-00
	Euro Energy Components AB	Järnvägsgatan 36, S-434 24 Kungsbacka, Sweden	+46 (0)300-690040
Switzerland	TriElec AG	Muehlentalstrasse 136, CH-8201 Schaffhausen, Switzerland	+41-(0)52-6258425
Taiwan	Setsuyo Enterprise Co., Ltd	5th Fl., No.105, Wu Kung 3rd, Wu-Ku Hsiang, Taipei, Taiwan, R.O.C.	+886-(0)2-2298-8889
Thailand	United Trading & Import Co., Ltd.	77/12 Bamrungmuang Road,Klong Mahanak Pomprab Bangkok Thailand	+66-223-4220-3
Tunisia	MOTRA Electric	3, Résidence Imen, Avenue des Martyrs Mourouj III, 2074 - El Mourouj III Ben Arous, Tunisia	+216-71 474 599
Turkey	Mitsubishi Electric Turkey A.Ş.	Şerifali Mahallesi Kale Sokak No: 41, 34775 Ümraniye, İstanbul, Turkey	+90-216-969-2666
United Kingdom	Mitsubishi Electric Europe B.V.	Travellers Lane, UK-Hatfield, Herts. AL10 8XB, United Kingdom	+44 (0)1707-276100
Uruguay	Fierro Vignoli S.A.	Avda. Uruguay 1274 Montevideo Uruguay	+598-2-902-0808
Vietnam	Mitsubishi Electric Vietnam Co.,Ltd. Head Office	11th & 12th Floor, Viettel Tower B, 285 Cach Mang Thang 8 Street, Ward 12, District 10, Ho Chi Minh City, Vietnam	+84-28-3910-5945
	Mitsubishi Electric Vietnam Co.,Ltd. Hanoi Branch	24th Floor, Handico Tower, Pham Hung Road, khu do thi moi Me Tri Ha, Nam Tu Liem District, Hanoi City, Vietnam	+84-24-3937-8075

For Safety : Please read the instruction manual carefully before using the products in this catalog. Wiring and connection must be done by the person has a specialized knowledge of electric construction and wiring.

●Trademarks
MODBUS is a registered trademark of Schneider USA Inc.

FA Global Site

https://www.mitsubishielectric.com/fa/products/lvd/lvcb/index.html

eco Changes **for a greener tomorrow**

Eco Changes is the Mitsubishi Electric Group's environmental statement, and expresses the Group's stance on environmental management. Through a wide range of businesses, we are helping contribute to the realization of a sustainable society.

MITSUBISHI ELECTRIC CORPORATION
HEAD OFFICE: TOKYO BUILDING, 2-7-3, MARUNOUCHI, CHIYODA-KU, TOKYO 100-8310, JAPAN

Y-0622K 2009〈IP〉

Revised publication, effective Sep. 2020.
Specifications are subject to change without notice.